Vulnerability-Based Seismic Assessment and Retrofit of One- and Two-Family Dwellings

Volume 2A - Plan Set for Crawlspace Dwellings

FEMA P-1100-2A / October 2019

FEMA

nehrp

Vulnerability-Based Seismic Assessment and Retrofit of One- and Two-Family Dwellings Volume 2A – Plan Set for Crawlspace Dwellings

Prepared by
APPLIED TECHNOLOGY COUNCIL
201 Redwood Shores Parkway, Suite 240
Redwood City, California 94065
www.ATCouncil.org

Prepared for
CALIFORNIA EARTHQUAKE AUTHORITY
Janiele Maffei, Chief Mitigation Officer
Erin Waters, Research Program Coordinator
Sacramento, California

FEDERAL EMERGENCY MANAGEMENT AGENCY
Michael Mahoney, Project Officer
Robert D. Hanson, Subject Matter Expert
Washington, D.C.

ATC MANAGEMENT AND OVERSIGHT
Jon A. Heintz
Ayse Hortacsu

PROJECT TECHNICAL COMMITTEE
Colin Blaney (co-Project Tech. Director)
Kelly Cobeen (co-Project Tech. Director)
Thomas Anderson
Vikki Bourcier
Michael Cochran
Daniel Dolan
Andre Filiatrault
Brian McDonald
John Osteraas
Weichiang Pang

PROJECT STEERING COMMITTEE
David Bonowitz (Chair)
Ifa Kashefi
Philip Line
Thor Matteson
Bill Nagel
Steve Pryor
Frank Rollo
Williston Warren (ATC Board Contact)

WORKING GROUP
Angela Arias
Gaurav Bali
Michael Ty Billings
Brent Crawford
Steve Fedorchak
Gayle Jensen
Kari Klaboe
Dave Laverdiere
David McCormick
Javier Pascacio
Michael Stoner
Doug Thompson
Taylor Vincent
Dave Welch

October 2019

Notice

Any opinions, findings, conclusions, or recommendations expressed in this publication do not necessarily reflect the views of the Applied Technology Council (ATC), the Department of Homeland Security (DHS), or the Federal Emergency Management Agency (FEMA). Additionally, neither ATC, DHS, FEMA, nor any of their employees, makes any warranty, expressed or implied, nor assumes any legal liability or responsibility for the accuracy, completeness, or usefulness of any information, product, or process included in this publication. Users of information from this publication assume all liability arising from such use.

Cover photograph – Photograph showing crawlspace dwelling.

Overview

Purpose and Scope

This Plan Set is for retrofit of crawlspace dwellings and is provided as a supplement to FEMA P-1100, *Vulnerability-Based Seismic Assessment and Retrofit of One-and Two-Family Dwellings, Volume 1 – Prestandard*. The Plan Set presents prescriptive, pre-engineered plans for a suggested minimum level of retrofit design for use by a general contractor or homeowner without necessarily having to involve a registered design professional. Use of this Plan Set is limited to dwellings that are compliant with eligibility statements presented in Table 1 on Sheet S0. The extent of the scope of this Plan Set is described on Sheet S0.

The Plan Set is intended to contain all of the necessary supplemental technical information and guidance for preparation of a complete set of plans for submittal to the local building department and for use during construction; however, supplemental information may be required by some building departments. Note that building permits are always required when performing the work described in this Plan Set.

The Plan Set does not attempt to address all potential deficiencies in a home and does not eliminate the risk of potential damage in future earthquakes.

Instructions for use are provided on Sheet 01.

Limitation of Liability

Earthquake strengthening constructed in accordance with this Plan Set is intended to reduce the risk of earthquake-related damage to existing residential dwellings with wood-frame cripple walls. The content of this Plan Set is based on the experience and judgment of practicing engineers and limited research. All circumstances, forms, or types of construction have not necessarily been contemplated in the preparation of this Plan Set, and it is not possible to control the quality of construction or predict or test all conditions that may occur during an earthquake. No party associated with the preparation of this Plan Set makes any representation, warranty, or covenant, expressed or implied, with respect to the design, condition, quality, durability, operation, fitness for use, or suitability of earthquake strengthening based on this Plan Set.

A. Before you begin:

1. This Plan Set is intended for use by a general contractor or homeowner without necessarily having to involve a Registered Design Professional.
2. Contact your local Building Official, often known as the Building Department, to understand the building permit application process.
   Inquire about:
   a. fees,
   b. how many copies of the plans must be submitted, and
   c. which city inspections are required, see F.3 below.
3. The Building Official may also be able to assist with assessing the applicability of this plan set to a home. See Eligibility For Use, Sheet S0.
4. Complete the Eligibility For Use questionnaire on Sheet S0 (Table 1), to determine if this plan set is applicable. A "non-compliant" answer to any question disqualifies the home from using this plan set, unless a Registered Design Professional is involved.

B. Determine your Seismic Design Category (SDC) and Weight Classification:

1. See Sheet S3 and determine the Seismic Design Category (SDC) and Weight Classification for the dwelling. This information will be used to determine which S3.1 sheet is applicable. Note that there are three unique S3.1 sheets for one-story dwellings with differing S_{DS} values and three similar sheets for two-story dwellings. Only one Sheet S3.1 will be applicable to any given dwelling and included within the set of drawings used for submission to the Building Official.

C. Prepare your plans:

1. Draw a scaled plan of the perimeter of the home in the graph layout area provided on Sheet S4, Foundation and Retrofit Layout Plan. Your plan should include the following:
   a. The location of any obstructions along the perimeter of the foundation that make the retrofitting work difficult or impossible such as fireplaces, water heaters, or utilities. These areas should be avoided when laying out the required retrofitting work.
   b. An arrow to indicate the direction of the span of your floor joists plus the spacing such as “floor joists at 16” on center.” This will be helpful when selecting the appropriate details shown on Sheets D1 - D6.
   c. Indicate the height of the tallest cripple wall for each wall line. The minimum required length of retrofitting along each wall line will be based, among other variables, on this height. See the sections in Details 1 and 2 on Sheet D4 for measurement of "cripple wall height."
   d. Dimensions for each length of perimeter wall segment and overall dimensions of wall lines.
   e. An arrow pointing to North.
   f. Label the street side (front) of the home.
   g. See Sheet X1 for an example of a plan sheet submittal.
   h. See Sheets X2 and X3 for additional examples and instructions of how certain items are calculated, such as the length of bracing at offset walls of non-rectangular "T" or "L" shaped dwellings, as noted in Section J, General Notes, Sheet S1.
   i. See Sheets X4 and X5 for illustrations and definitions of terms for retrofit conditions.

D. Gather information to complete the plans:

1. Review Sheets S1 and S2 for guidance on materials and installation for the required work.
2. Review the Detail Sheets included in this plan set (Sheets D1-D7). Locate the details that most substantially match the home’s framing conditions. Not all details or sheets will apply. As a minimum, you should have one detail each for:
   a. The foundation sill to concrete foundation connection (Sheet D1); and
   b. The floor framing to foundation sill connection (Sheet D2); or
   c. Floor framing to cripple wall connection (Sheet D3 and/or Sheet D3.1).
3. Differences in existing conditions from those illustrated on the details that result in changes to these drawings will need to be reviewed by a Registered Design Professional. See "Purpose" on Sheet S0 for additional information.
4. Once you have chosen the correct (applicable) S3.1 sheet, follow the instructions provided to determine the amount and type of earthquake retrofitting required along each perimeter wall line. Once Steps 1 through 7 of the instructions are completed, document the results within the Retrofit Table as explained in Step 8.
5. Refer to Supplemental Technical Notes on Sheet S2 where tie-downs are required.

E. Complete your plans:

1. Using the information from the Earthquake Retrofit Schedule on Sheet S3.1, add the following to complete your Foundation and Retrofit Layout Plan on Sheet S4:
   a. Indicate and dimension the total length of braced wall sections required at each wall line.
   b. Identify the details used for the connections as noted in D.2 above. Indicate the connection type and the minimum number of connectors for each wall line. Conform to Sections L and M of Sheet S1.
   c. Identify the details used for the wood structural panel (Sheets D4 or D5).
   d. If tie-downs are used, identify the details used (Sheet D5).
   e. Identify the detail used for the top plate splice (Sheet D6).
   f. Identify the details used for notching and/or cutouts (Sheet D6.)

F. Submit your plans:

1. Submit a permit application and the required number of completed sheets (Sheets S0 through D7) to the Building Official for review. Photographs of the foundation sill, cripple wall, and floor framing conditions may assist the review process.
2. Before starting work, the permit holder may be required to schedule a preconstruction inspection with the Building Official to verify that field conditions are consistent with the information provided on the approved plan.
3. Inspection(s) by the Building Official may be required for:
   a. Foundation Anchor bolts / Anchor Plate installation,
   b. Blocking installation,
   c. Wood structural panel on cripple wall, sheathing and nailing,
   d. Metal hardware "connectors" installation,
   e. Tie-downs, and
   f. Final inspection.

SHEET LIST

01*	Instructions for Use
S0	Cover Sheet
S1	General Notes
S2	Supplemental Technical Notes
S3	Seismic Design Category, Weight Classification, and Connectors
S3.1**	Earthquake Retrofit Schedule - S_{DS} 1.0, One-Story
S3.1**	Earthquake Retrofit Schedule - S_{DS} 1.2, One-Story
S3.1**	Earthquake Retrofit Schedule - S_{DS} 1.5, One-Story
S3.1**	Earthquake Retrofit Schedule - S_{DS} 1.0, Two-Story
S3.1**	Earthquake Retrofit Schedule - S_{DS} 1.2, Two-Story
S3.1**	Earthquake Retrofit Schedule - S_{DS} 1.5, Two-Story
S4	Foundation and Retrofit Layout Plan
D1	Foundation Sill to Concrete Foundation Connection Details
D2	Floor Framing to Foundation Sill Connection Details
D3	Floor Framing to Cripple Wall Connection Details
D3.1	Floor Framing to Cripple Wall Connection Details
D4	Wood Structural Panel Installation without Tie-Downs
D5	Wood Structural Panel Installation with Tie-Downs
D6	Vent Openings and Top Plate Details
D7	Foundation Replacement Details
X1*	Example of Foundation and Retrofit Layout Plan
X2*	Example - Foundation Plan (Dwelling without Tie-Downs)
X3*	Example - Foundation Plan (Dwelling with Tie-Downs)
X4*	Illustration - Cripple Wall Retrofit
X5*	Illustration - Retrofit - No Cripple Wall

* Sheet for reference only. Do not submit to the Building Official.
** Only one "S3.1" sheet will be submitted to the Building Official.

This sheet is for instruction and reference only.

Do not submit to the Building Official.

Instructions for Use

Retrofit of Crawlspace Dwellings (Plan Set)
Vulnerability-Based Seismic Assessment and Retrofit of
One- and Two-Family Dwellings
FEMA P-1100, Volume 2 - Plan Sets
Issued: SEPT 2019

FEMA

01

PURPOSE

The purpose of this Plan Set is to promote public safety and welfare by reducing earthquake-induced damage to existing wood-frame cripple wall dwellings. The prescriptive designs provided in this Plan Set, which is being published as FEMA P-1100, Volume 2, are deemed to comply with Chapter 4 of the FEMA P-1100 Prestandard. The provisions of this Plan Set address a single vulnerability; see the FEMA P-1100 Prestandard for assessment and retrofit methodologies. Use of this Plan Set is intended improve earthquake performance but is not intended to prevent earthquake damage. For additional information, see https://www.fema.gov/media-library/assets/documents/175158

SCOPE

This Plan Set contains prescriptive provisions for retrofit of wood light-frame crawlspace dwelling anchorage to the foundation and cripple walls. Dwellings shall be considered cripple wall dwellings for purposes of this plan set when:

- The dwelling has unoccupied space below the lowest framed floor.
- The dwelling has cripple walls not exceeding 7'-0" tall *(Figure 1)*.
- The downhill slope does not exceed 20%. (*Figures 2 & 3*).

Where dwellings include both crawlspaces and portions of the dwelling with concrete slabs-on-grade, this Plan Set applies to the perimeter of the crawlspace portions of the dwelling. This Plan Set does not require work in the slab-on-grade portions of the dwelling. However, the user is encouraged to add additional anchor bolts, where possible, around the perimeter of the slab-on-grade portions per Sheet D1 to increase the foundation sill to existing concrete connection.

ELIGIBILITY

Cripple wall dwellings are permitted to use the prescriptive retrofit provisions of this Plan Set when all questions in Table 1 can be answered with "compliant". For dwellings not eligible to use this Plan Set, see the FEMA P-1100 Prestandard, Section 4.5 for the Simplified Engineered Procedure.

DIFFERING CONDITIONS

Where a dwelling's actual conditions require modification of the vulnerability-based prescriptive retrofit solutions identified within this plan set, additional or modified details may be generated by a Registered Design Professional and used to supplement the prescriptive procedures of this section. These supplemental details shall be stamped and signed by a Registered Design Professional and approved by the Building Official in accordance with the FEMA P-1100 Prestandard, Section 4.5.

DESIGN BASIS

This Plan Set is deemed to comply with Chapter 4 of FEMA P-1100 Prestandard. Specific design assumptions are as follows: R = 4.0; Ω_o = 1.5; S_{DS} = Varies (between 1 and 1.5), Site Class C.

Figure 1

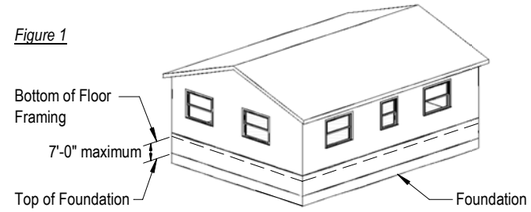

Figure 2

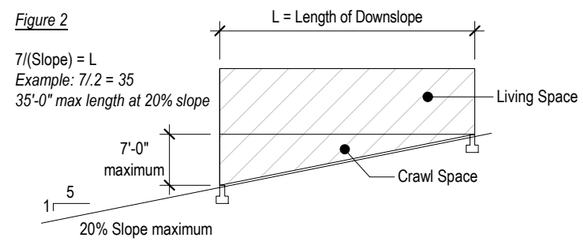

Figure 3

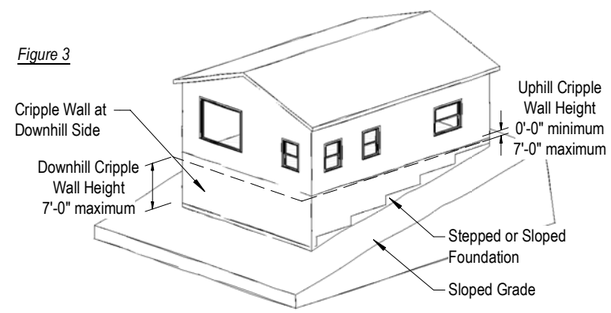

GENERAL

Cripple Wall Retrofit in accordance with this plan set shall include each of the following for the full extent of the crawlspace perimeter (*Figure 4*):

1. Wood structural panels in accordance with the Earthquake Retrofit Schedule, Sheet S3.1 and details on Sheets D5 & D4 at all non-zero height cripple walls, and
2. Foundation sill plate anchorage to the foundation in accordance with the Earthquake Retrofit Schedule, Sheet S3.1 and details on Sheets D1 & D2, and
3. Floor framing to cripple wall top plates or floor framing to foundation sill plate connections in accordance with the Earthquake Retrofit Schedule, Sheet S3.1 and details on Sheets D3 & D5.

Any retrofit not incorporating each applicable item at the full crawlspace perimeter shall not be identified as conforming to this Plan Set.
All work shall be in accordance with Sheet S1 General Notes.

This Plan Set for strengthening is intended to be approved by the Building Official without requiring additional plans or calculations, except as required for differing conditions.

ASSESSMENT

The retrofit provisions of this Plan Set are intended to apply to dwellings that have been assessed using the FEMA P-1100 Prestandard methodology and found to have a crawlspace dwelling vulnerability.

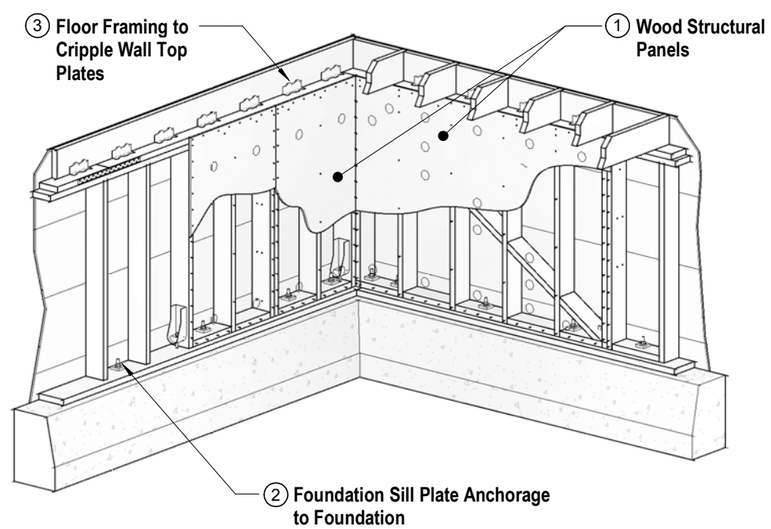

Figure 4

Table 1: ELIGIBILITY FOR USE

To determine if a home qualifies; answer the following:	Compliant	Non-compliant
1. The dwelling is a one- or two-family detached structure or townhouse. The dwelling unit is a townhouse and assessment and retrofit will occur for all attached townhouse dwelling units at the same time.		
2. The dwelling is a wood light-frame dwelling that is two stories or less.		
3. The dwelling is a crawlspace dwelling as defined in Chapter 2 of FEMA P-1100 Prestandard and the perimeter (not including porches or other appurtenances) is supported on: a. Cripple walls, or b. Foundation stem walls, or c. Post and pier systems to be retrofitted with cripple walls, or d. Cripple walls or foundation stem walls in combination with a slab on grade foundation.		
4. The dwelling has a continuous perimeter foundation (not including porches or other appurtenances), concrete stem walls, or will be retrofitted to have a continuous perimeter foundation.		
5. Cripple walls, where they occur, do not exceed 7'-0" in clear height.		
6. The maximum slope as measured from the top of foundations along one edge of the home to the other end does not exceed 5 to 1 (horizontal to vertical) or 20%.		
7. Weight of roofing material shall not exceed 12 psf., except for one-story crawlspace dwellings with clay tile roofing as described in footnote 1 below.		
8. Weight of exterior wall finish shall not exceed 10 psf., except that masonry wainscots supported on concrete or masonry foundations are permitted to extend up to four feet above the top of foundation.		
9. Weight of interior wall finish shall not exceed 8 psf, except that veneer fireplace surrounds of not more than 4" thick and of up to 100 square feet of vertical surface are permitted to exceed this weight.		
10. Weight of floor finish shall not exceed 5 psf, except that heavier floor finishes of up to 10 psf are acceptable where limited to 25% of the total floor area of each level.		
11. Floors in each story are at the same level and not split level, excluding slab on grade portions.		
12. The maximum square footage of the dwelling, excluding areas supported on slabs on grade, do not exceed 3,000 square feet for one story dwellings and 4,000 square feet for two-story dwellings.		
13. No part of the foundations is constructed of unreinforced masonry or stone.		
14. Clear floor to ceiling heights at any occupied level do not exceed 9'-0".		
15. There is no indication that an engineered seismic force-resisting system is present in the dwelling (engineered plans, visible tie-down brackets).		

If you answered "Compliant" to each of these questions, proceed to Sheet S3.
If you answered "Non-compliant" to any of these questions the home is not eligible to apply this plan set, unless a Registered Design Professional addresses the non-compliant issues in accordance with P-1100 FEMA Prestandard, Section 4.5, Differing Conditions.

Footnote:

1. One story crawlspace dwellings with clay tile that weigh up to 20 psf shall be permitted to be strengthened in accordance with the provisions for two-story heavy construction as noted in the applicable Earthquake Retrofit Tables.

SHEET LIST

S0	Cover Sheet
S1	General Notes
S2	Supplemental Technical Notes
S3	Seismic Design Category, Weight Classification, and Connectors
S3.1	Earthquake Retrofit Schedule
S4	Foundation and Retrofit Layout Plan
D1	Foundation Sill to Concrete Foundation Connection Details
D2	Floor Framing to Foundation Sill Connection Details
D3	Floor Framing to Cripple Wall Connection Details
D3.1	Floor Framing to Cripple Wall Connection Details
D4	Wood Structural Panel Installation without Tie-Downs
D5	Wood Structural Panel Installation with Tie-Downs
D6	Vent Openings and Top Plate Details
D7	Foundation Replacement Details

APPLICANT INFORMATION

APPLICANT: _____
ADDRESS: _____
PHONE: _____
SIGNATURE: _____

Cover Sheet

Retrofit of Crawlspace Dwellings (Plan Set)
Vulnerability-Based Seismic Assessment and Retrofit of One- and Two-Family Dwellings
FEMA P-1100, Volume 2 - Plan Sets
Issued: SEPT 2019

FEMA

Revision:	Date:

Date:
Sheet: **S0**

A. CODE

1. All work not otherwise specified shall conform to the locally adopted version of the building code or residential code. Contractor shall comply with all locally adopted building codes and ordinances.

B. GENERAL

1. The contractor is responsible for maintaining a safe job site and complying with relevant state and/or federal OSHA standards. Contractor is responsible for the means and methods for accomplishing the work shown in this plan set, including any shoring and bracing of existing construction as required to safely install new work. Exercise caution working around existing utilities, locate underground utilities before excavating, and arrange for temporary disconnection of utilities if necessary.
2. All existing under floor ventilation and access shall be maintained.

C. EXISTING CONDITIONS

1. Contractor shall confirm that existing conditions match plans and details prior to start of work.
2. Contractor shall verify that existing concrete, anchor bolts, wood framing, and other materials that will become part of the work or to which retrofit construction is attached is in reasonably sound condition and free of defects that would substantially reduce the capacity of the material. Where possible, damaged or deteriorated elements shall be repaired in place or supplemented with new elements. Otherwise damaged or deteriorated members shall be replaced. Repair or replacement shall be in accordance with the adopted building or residential code.
3. The Owner or Contractor shall verify that the existing concrete within all areas to receive new anchor bolts are in reasonably good condition. Examples of poor concrete quality would include excessive spalling, large rock pockets, cracks extending completely through the footing greater than 1/4" wide (closer than 6'-0" on center on average), or low strength concrete cement or mortar easily scrapable with a metal knife or trowel. Strengthening should be avoided in local areas of poor quality. Where these areas cannot be avoided, or where locations of poor quality are widespread, the new anchors shall be torque tested in accordance with Table C-1. Where torque tests continue to fail, the existing foundation system shall be replaced locally for a minimum of 30 inches on each side of the proposed anchor location.

Table C-1 : Foundation Verification Requirements

	Screw Anchor	Adhesive Anchor
Diameter ø	Torque (ft-lbs)	Torque (ft-lbs)
1/2"	35	15
5/8"	50	20

D. NOTCHING, BORING AND CUTTING

1. Do not cut, bore, or notch structural members except as shown in these drawings or as specifically permitted by the building inspector. Exception: Notching and boring of framing shall be permitted as per Chapter 6 of the International Residential Code (IRC)
2. When drilling in concrete, do not drill through existing reinforcing steel. If reinforcing steel is hit during drilling, move a minimum of one inch and drill relocated hole. Fill original hole with non-shrink grout.

E. CONCRETE

1. Concrete shall have a strength of not less than 3,000 psi at 28 days (design based on 2,500 psi). Concrete mixed on site shall be mixed and placed in accordance with the manufacturer's instructions using potable water.

F. REINFORCING STEEL (REBAR)

1. Reinforcing steel shall confirm to ASTM A615 Grade 40 or 60, ASTM A706, or ASTM A996 Type R.
2. Reinforcing steel bend radii and other rebar detailing shall be in accordance with Concrete Reinforcing Steel Institute.
3. Minimum concrete cover over reinforcing steel:
   a. Concrete cast against and permanently exposed to soil: 3 inches
   b. Formed concrete exposed to weather: 2 inches
   c. Concrete not exposed to weather or in contact with soil: 1-1/2 inch
   d. Reinforcing steel lap splice lengths: No. 4 / No. 5
      - Horizontal bars with more than 12 inches concrete below: 32 inches / 42 inches
      - Other bars: 24 inches / 32 inches

G. STRUCTURAL STEEL

1. Structural steel W-sections, plate, bar and miscellaneous steel shall be ASTM A36, A992, or A572. Welding shall comply with AWS D1.1 requirements using prequalified welding procedures. All welding shall be conducted by welders certified for the materials and welding procedures used.
2. Bolts shall conform to ASTM A-307. Threaded rods shall conform to ASTM A-36.

H. FASTENERS

1. General
   a. All bolts, nails, and other fasteners in contact with preservative-treated wood or exposed to weather shall be hot-dip galvanized or stainless steel.
2. Nails
   a. Unless otherwise noted, all nails specified are to be common nails.
   b. Special care is required when installing nails in existing framing. Where required to avoid splitting of framing, predrill to 75% of nail shank diameter.
   c. Fasteners for wood structural panel sheathing shall be full length 8d common nails (0.131" x 2.1/2"). Drive sheathing nail head flush with face of sheathing.
   d. Do not overdrive, countersink, or otherwise damage the outermost ply when installing nails. A nail is over-driven when it breaks the surface ply. Where nails are overdriven to the point that the veneer is fractured, add one new nail for every (2) overdriven nails. Space new nails between existing.
3. Anchor Bolts
   a. Predrill bolt holes to not more than 1/16th inch larger than bolt or anchor bolt to be placed.
   b. At each perimeter wall line, provide a minimum quantity of Foundation Sill Anchors as required by the Earthquake Retrofit Schedule. Place new anchors between 8 and 12 inches from the end of each foundation sill plate and distrubute the remaning anchors as evenly as practical along the wall line.
   c. Provide steel plate washers 0.229 x 3 x 3 inch minimum at all anchor bolts. Centerline of washer should be 1-1/2" to 2" from face of sheathing.
   d. Anchor bolts shall be a maximum spacing of 64" on center for one-story dwellings and 48" on center for two-story dwellings along the entire portion of all exterior walls, except as noted in Section J.
   e. For braced wall sections without tie-downs, provide one of the required anchor bolts within 8" of each end and one additional anchor bolt at each end as noted on Sheet D4.
   f. For braced wall sections with tie-downs, provide one additional anchor bolt within 8" minimum and 12" maximum from tie-down as noted on Sheet D5.

I. WOOD STRUCTURAL PANEL SHEATHING

1. Wood structural panels shall be 15/32" plywood sheathing, all veneer, conforming to US voluntary Product Standard PS-1, Exposure I or Exterior Exposure, manufactured with exterior glue, and minimum 4-ply.
2. Oriented Strand Board (OSB) shall be 15/32" thick and conform to US Voluntary Product Standard PS 2 with an exposure rating of Exposure 1 or Exterior Exposure, manufactured with exterior glue, and minimum 4-ply.
3. Provide 1/8-inch minimum gap at all sheathing panel ends and edges.
4. Maintain a minimum edge distance of 3/8" from center of nail to edges of sheathing, studs, or top and sill plates. See Sheet D4 for double stud at sheathing panel joints.
5. Braced wall sections closest to the ends of wall lines shall be located as near to the ends as practicable. Braced wall sections may be located away from the ends of a wall line when existing obstructions or limited clearance necessitate such relocations.
6. Braced wall sections along the length of a wall line should be nearly equal in length and should be nearly equal in spacing where possible. Using increments of existing stud spacing is expected.
7. The length of each braced wall section shall not be less than 48 inches. The length of braced wall sections without tie-downs should be equal to or exceed twice the height of the cripple wall. Exceptions are permitted when obstructions do not allow braced wall sections of the required length.

J. ADDITIONAL REQUIREMENTS FOR NON-RECTANGULAR DWELLINGS WITH "T OR "L" PLAN CONFIGURATIONS

1. Plan configurations other than rectangular such as "T" or "L" shapes that have offsets in the exterior wall lines, within the crawl space plan area, greater than 33% of the largest plan dimension shall meet the following special provisions in that direction:
   a. Foundation sill to foundation connections along offset walls shall have a maximum spacing of 32" on center.
   b. Floor joist to foundation sill and floor joist framing to the top of cripple wall connections along offset walls shall have a maximum spacing of 16" on center.
   c. Cripple walls, where they occur, shall be sheathed with new wood structural panels. The sheathing shall have a minimum length of 90% of the offset wall length.

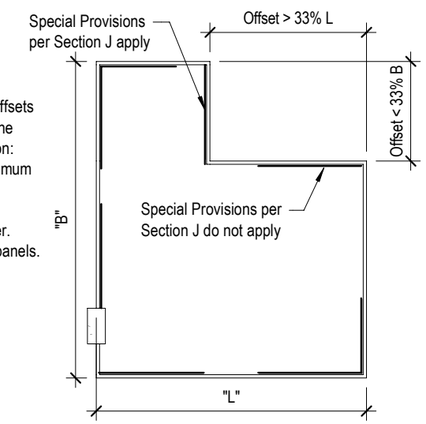

K. FRAMING

1. Framing shall be Douglas Fir-Larch, or an approved species having a greater or equal specific gravity.
2. Framing in contact with foundations or exposed to weather shall be preservative treated in accordance with AWPA U1 (Commodity Specification A, Use Category 4B). Field treat all cuts, bores and notches per AWPA M-4.

L. CONNECTOR DEVICES

1. Connectors shall be pre-engineered pre-manufactured devices, approved by the Building Official and installed in accordance with the manufacturer's instructions.
2. Connectors protected from weather shall be provided with a minimum of G90 zinc coating in accordance with ASTM A653. Connectors exposed to weather or in contact with preservative treated wood shall be provided with a minimum hot-dip galvanized coating or G185 coating in accordance with ASTM A653, and fasteners conforming to ASTM A153.
3. Connector devices shall be of the type and size specified in these drawings.
4. Connectors required by the Earthquake Retrofit Schedule (Sheet S3.1) shall be distributed equally along the length of each wall line or within the length of the braced wall panel(s).
5. Connector spacing may not be less than 8" on center.
6. Increase nail or screw length 1/2-inch minimum when installing connectors over wood structural panels.

M. POST-INSTALLED ANCHORS

1. Post-installed anchors shall be installed in accordance with the manufacturer's installation instructions.
2. Adhesive anchors shall be Simpson Strong-Tie SET-XP, HILTI RE 500 SD, CIA GEL 7000C, or approved equivalent.
3. Concrete screws shall be Simpson Strong-Tie Titen HD, KC Metals Kwik-HUS-EZ, or Powers Fasteners Wedge-Bolt, or approved equivalent.
4. See H.3. for additional anchor bolt requirements.

N. PERMITS

1. All work required by this Plan Set shall be permitted through the building department.

O. INSPECTIONS

1. Contractor shall coordinate with the building inspector to ensure that work is accessible for building department inspections, and shall correct non-compliant work as identified by the inspector.

P. SPECIAL INSPECTIONS

1. Special inspection by a third party inspector is not required for the following:
   a. Concrete or reinforcing steel for foundations. Design is based on an ultimate concrete strength of 2,500 psi or less.
   b. Installation of cast-in-place or post-installed anchor bolts.
   c. Installation of adhesive anchors for tie-down devices, provided that each anchor is torque-tested in accordance with Table R-2, Sheet S2.
   d. Nailing of wood structural panel shear walls, provided a building department inspection is performed.

APPLICANT: _____

PROPERTY ADDRESS: _____

General Notes

Retrofit of Crawlspace Dwellings (Plan Set)
Vulnerability-Based Seismic Assessment and Retrofit of
One- and Two-Family Dwellings
FEMA P-1100, Volume 2 - Plan Sets
Issued: SEPT 2019

FEMA

Date:

Sheet:

S1

Q. PURPOSE OF SUPPLEMENTAL TECHNICAL NOTES

1. These Supplemental Techical Notes provide guidance for the installation of wood structural panels that use tie-downs and existing foundation systems. Tie-downs shall be used where there is insufficient wall length to install the length of wood structural panels specified in the Earthquake Retrofit Schedule, Sheet S3.1.
2. Where "With Tie-down" (as specified on the Earthquake Retrofit Schedule, Sheet S3.1) is used to determine the amount of strengthening required along each wall length, additional visual verification and testing of the existing foundation system is required to be completed by the owner or general contractor and approved by the Building Official, and documented in Table R-1 prior to commencing any work. Visual verification and testing shall be as noted in Section R.
3. Where these requirements are not met, a new foundation system will be required in accordance with Sheet D7.

R. EXISTING FOUNDATION REQUIREMENTS AND TESTING

1. The size of existing foundation systems at the location of new tie-down anchors shall be verified to be at least 15" deep ("D") and 8" wide ("W"). The dimension "D" shall be measured from the bottom of footing to the underside of the existing mudsill. The dimension "W" shall be measured from the top outside face of footing to the inside top face of footing. See Table R-1, item A.1.
2. Verification of the overall quality of concrete along any wall line requiring tie-downs shall be made and documented within Table R-1, item B.1. This verification shall be made by use of a minimum of two sacrificial torque tests along each wall line where tie-downs are used. These tests shall consist of installing 1/2" or 5/8" diameter screw-type bolts into the existing concrete and verifying that a value per Table R-2 can be achieved. Torque tests can be performed either by the owner, a general contractor, or a special inspection company or testing agency hired by the owner and as approved by the Building Official.
3. Where "Tie-downs" are used to determine the sheathed panel length required along a wall line, each adhesive anchor shall be torque tested in accordance with Table R-2.

S. TIE-DOWN REQUIREMENTS

1. Tie-downs shall be Simpson HDU2-SDS2.5, KC Metals ADST2, USP Structural Connectors PHD2A, or an equivalent with an allowable tensile load of 3075 lbs or more, installed per manufacturer's instructions.
2. End studs(s) to which tie-downs are installed, shall be 3x minimum or double 2x. For nailing at double studs, see Sheet D5.
3. All tie-downs shall use 5/8"ø (A36) threaded rod adhesive-type anchors with minimum embedment per Detail 1, Sheet D5.

T. MINIMUM INSTALLATION REQUIREMENTS FOR TIE-DOWN ANCHORS TO FOUNDATIONS

1. All holes shall be drilled to the specified diameter and depth.
2. All holes shall be blown clean of dust with oil-free compressed air for a minimum of 4 seconds.
3. All holes shall be cleaned with a nylon brush for a minimum of 4 cycles.
4. Blow holes clean of dust with oil-free compressed air for a minimum of 4 seconds.
5. Check adhesive cartridge expiration date, open, and install per the manufacturer's instructions.
6. Fill the holes 1/2 to 2/3 full, starting at the bottom of the hole to prevent air pockets and withdraw the nozzle as the hole fills up.
7. Insert a clean and oil-free anchor turning slowly until the anchor contacts the bottom of the hole.
8. Do not disturb the anchor until fully cured. See manufacturer's instructions.

Table R-1: Verification of Existing Foundation System

Requirement	Yes or N/A	Signature of Owner or Contractor (Owner performing work)
A.1 The size of the existing foundation is greater than or equal to that specified in Section R, item 1.		Signature
B.1 The existing foundation has been verified to be in generally good condition at planned tie-down locations as specified in Section R, item 2.		Signature
C.1 The capacity of each new tie-down anchor has been verified by passing the torque tests specified in Table R-2.		Signature
D.1 All adhesive anchors were installed per the manufacturer's instructions per the minimum steps as noted in Section T.		Signature

Table R-2: Foundation Verification Requirements

	Screw Anchor	Adhesive Anchor
Diameter ø	Torque (ft-lbs)	Torque (ft-lbs)
1/2"	35	15
5/8"	50	20

APPLICANT: _____

PROPERTY ADDRESS: _____

Supplemental Technical Notes

(Where Tie-downs are Required)

Retrofit of Crawlspace Dwellings (Plan Set)

Vulnerability-Based Seismic Assessment and Retrofit of One- and Two-Family Dwellings

FEMA P-1100, Volume 2 - Plan Sets

Issued: SEPT 2019

FEMA

Date:

Sheet:

S2

Seismic Design Category (SDC)

1. The first factor taken into consideration when determining the appropriate amount of earthquake strengthening is the anticipated level of seismic shaking or S_{DS} value, which is directly related to the Seismic Design Category (SDC).

2. To find the appropriate S_{DS} value, which is either 1.0, 1.2, or 1.5, you must first determine your Seismic Design Category (SDC) by clicking the link below.

   a. In your internet browser go to http://www.atcouncil.org/fema-p-1100
   b. Click on one of the five (5) geographic areas listed to find your location on the appropriate map.
   c. Locate your SDC (SDC A-SDC E) by the color contour shown on the map which corresponds to the % g values shown.
   d. For SDC A-D_1, use S_{DS} = 1.0.
   e. For SDC D_2, use S_{DS} = 1.2 unless the site class can be determined as A, B, or D, in which case use S_{DS} = 1.0.
   f. For SDC E, use S_{DS} = 1.5

   Note: where your location is on, or close to, the border of two SDC's, it is prudent to choose the higher value.

3. Make a note of the appropriate S_{DS} value. It will be used together with the number of stories the dwelling has to determine the appropriate Earthquake Retrofit Schedule (Sheet S3.1) to use in preparing and submitting the plans. You will only use one of the following six Earthquake Retrofit Schedule Sheets. Do not submit the unused S3.1 sheets to the Building Official.

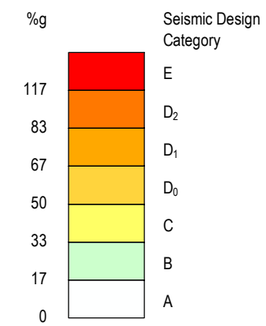

Figure 1. SDC versus %g

Weight Classification

The next factor used to establish the appropriate amount of earthquake strengthening is the dwelling weight. For the purposed of this Plan Set, three weight classifications (Heavy, Medium, and Light) have been established as described below. Using the flowchart presented:
1. Start with the exterior finish and move progressively to roofing material then to the interior finish.
2. Note the weight classification result for use in the Earthquake Retrofit Schedule, Sheet S3.1.

Specific notes for exterior, interior and roof coverings:
1. The "wood siding or shingles" exterior finish category also includes finishes of similar weight, including but not limited to fiber-cement and aluminum siding.
2. The "comp or shingles" roofing material category also includes roofing materials of similar weight, including but not limited to roll roofing, built-up felt roofing, single-ply membrane roofing, and metal roofing.
3. The "gypsum board" interior finish category also includes wall finish materials of similar weight, including but not limited to wood board or panel siding.
4. The exterior finish, roofing material, and interior finish categories are intended to be identified based on the predominant materials used in construction. Where interior or exterior finishes vary, a heavier type finish shall be assumed where 25% or more of the heavier finish type exists within the dwelling.

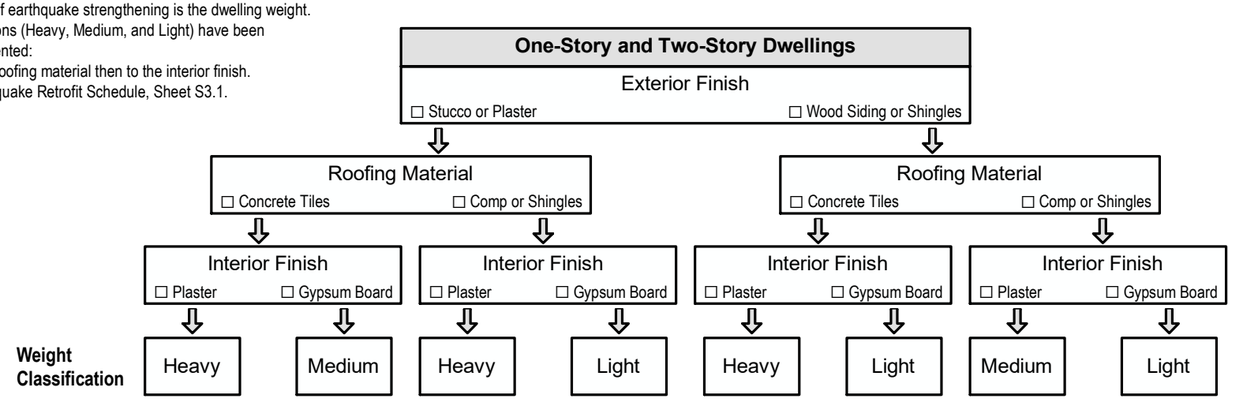

Connectors

1. Manufacturer's model numbers and installation instructions are subject to change. Verify and follow manufacturer's written instructions.
2. Connector images are general in nature only. Individual manufacturer's connectors may vary.
3. Any of the connectors listed within a particular group may be used for strengthening the particular condition.
4. This Plan Set was developed using the lowest listed manufacturer's capacity within a particular group.
5. Where connectors listed within the applicable Earthquake Retrofit Schedule will not fit within a particular wall line due to limitations in length, alternate connections may be substituted but shall be designed or selected by a registered design professional and approved by the Building Official.

CONNECTORS

IMAGE	MANUFACTURER	MODEL	CAPACITY
	TYPE A		
	TYPE B		
	TYPE C		
	TYPE D		
	TYPE E		
	TYPE F (Note 3)		
	TYPE G		
	TYPE H		
	TYPE S1		

ANCHOR BOLTS

MANUFACTURER	MODEL	EMBEDMENT DEPTH 1/2"ø	EMBEDMENT DEPTH 5/8"ø
SCREW-TYPE		3-1/2" 4-1/2" 3-3/8"	3-1/2" n/a 3-3/8"
ADHESIVE	Threaded Rod with:	4-1/4" 2-3/4" 2-3/4"	5" 3-1/8" 3-1/8"

TIE-DOWNS

Supplemental Technical Notes, Sheet S2, Section S

IMAGE

Note: Tie-down capacities listed above are ASD and based on manufacturer's data. The allowable ASD capacity used for development of this plan set has been reduced to 3000# based on anchorage to existing foundation systems. Tie down anchors must be installed per Detail 1, Sheet D5.

APPLICANT: _____

PROPERTY ADDRESS: _____

Seismic Design Category, Weight Classification, and Connectors

Retrofit of Crawlspace Dwellings (Plan Set)
Vulnerability-Based Seismic Assessment and Retrofit of One- and Two-Family Dwellings
FEMA P-1100, Volume 2 - Plan Sets
Issued: SEPT 2019

FEMA

Date:

Sheet:

S3

EARTHQUAKE RETROFIT SCHEDULE (S_{DS}= 1.0 Seismic) ONE-STORY

① Weight Category	② Total Area in Square Feet	③ Mark row that applies ☒	⑤ Length Each of Two Braced Wall Sections Required Along Each Perimeter Wall Line — Wood Structural Panels — ④ Cripple Wall Height: up to 1' Without Tie-downs	1'-1" to 2' Without Tie-downs	2'-1" to 4'-0" Without Tie-downs	2'-1" to 4'-0" With Tie-downs	4'-1" to 6'-0" Without Tie-downs	4'-1" to 6'-0" With Tie-downs	6'-1" to 7'-0" Without Tie-downs	6'-1" to 7'-0" With Tie-downs	Panel Edge Nailing	Number of Foundation Connectors or Anchors at Each Perimeter Wall Line Assume Distributed Along Length — ⑥ Foundation Sill Anchors: Type "A"	Type "B"	Type "C"	1/2"ø Bolt	5/8"ø Bolt	⑦ Floor to Cripple Wall or Floor to Foundation Sill: Type "D"	Type "E" or "F"	Type "G"
1-Story Light Construction	up to 800		5.3'	5.3'	8.0'	5.3'	9.3'	5.3'	9.3'	6.7'	4"	4	7	7	7	5	11	10	14
	801 to 1000		6.7'	6.7'	8.0'	6.7'	10.7'	6.7'	10.7'	8.0'	4"	5	8	8	8	6	13	12	16
	1001 to 1200		6.7'	6.7'	9.3'	6.7'	10.7'	8.0'	12.0'	8.0'	4"	6	9	10	10	7	15	14	19
	1201 to 1500		8.0'	8.0'	10.7'	8.0'	13.3'	9.3'	13.3'	9.3'	4"	7	11	12	12	8	18	17	22
	1501 to 2000		9.3'	10.7'	13.3'	10.7'	14.7'	10.7'	16.0'	12.0'	4"	9	14	15	15	10	23	22	29
	2001 to 2500		12.0'	12.0'	14.7'	12.0'	17.3'	12.0'	18.7'	13.3'	4"	10	16	18	18	12	27	26	35
	2501 to 3000		14.7'	14.7'	16.0'	14.7'	18.7'	14.7'	20.0'	16.0'	4"	12	19	21	21	14	32	31	40
1-Story Medium Construction	up to 800		5.3'	6.7'	8.0'	5.3'	9.3'	6.7'	10.7'	6.7'	3"	5	8	8	8	6	13	12	16
	801 to 1000		5.3'	6.7'	9.3'	6.7'	10.7'	8.0'	12.0'	8.0'	3"	6	9	10	10	7	15	14	19
	1001 to 1200		6.7'	8.0'	9.3'	6.7'	12.0'	8.0'	12.0'	9.3'	3"	7	10	11	11	8	17	17	22
	1201 to 1500		8.0'	8.0'	10.7'	8.0'	13.3'	9.3'	14.7'	10.7'	3"	8	12	13	13	9	20	20	26
	1501 to 2000		9.3'	10.7'	13.3'	9.3'	14.7'	10.7'	16.0'	12.0'	3"	10	15	17	17	11	25	24	32
	2001 to 2500		10.7'	12.0'	14.7'	10.7'	17.3'	13.3'	18.7'	13.3'	3"	12	18	20	20	14	30	29	38
	2501 to 3000		12.0'	13.3'	16.0'	12.0'	18.7'	14.7'	20.0'	16.0'	3"	13	21	23	23	16	35	34	45
1-Story Heavy Construction	up to 800		5.3'	6.7'	8.0'	5.3'	10.7'	6.7'	10.7'	8.0'	2"	6	9	10	10	7	15	14	18
	801 to 1000		6.7'	8.0'	9.3'	6.7'	12.0'	8.0'	12.0'	9.3'	2"	7	10	11	11	8	17	17	22
	1001 to 1200		6.7'	8.0'	10.7'	8.0'	12.0'	9.3'	13.3'	10.7'	2"	8	12	13	13	9	20	19	25
	1201 to 1500		8.0'	9.3'	12.0'	9.3'	14.7'	10.7'	14.7'	12.0'	2"	9	14	15	15	11	24	23	30
	1501 to 2000		9.3'	10.7'	14.7'	10.7'	16.0'	12.0'	17.3'	13.3'	2"	11	18	19	19	13	30	29	38
	2001 to 2500		10.7'	13.3'	16.0'	12.0'	18.7'	14.7'	20.0'	16.0'	2"	13	21	23	23	16	36	34	45
	2501 to 3000		12.0'	14.7'	17.3'	13.3'	20.0'	16.0'	21.3'	17.3'	2"	16	25	27	27	18	41	40	53

Notes:

1. Anchor bolts and Connectors shown in the Earthquake Retrofit Schedule are the minimum required per wall line, placed within the length of strengthening where possible and spaced as equally along each wall line as possible. Note that where using 1/2" or 5/8" bolts, one additional anchor is required at the end of each braced wall panel per Sheet D4.
2. Tie-downs: If your foundation meets the criteria, you may choose the tie-down option to decrease the required length of strengthening. This may be required where the length of the wall without tie-downs specified in this schedule is longer than can be accommodated by existing conditions. However, there is a level of uncertainty when dealing with existing foundations, therefore, where possible, longer lengths of strengthening, without tie-downs, are preferred. (See Supplemental Technical Notes, Sheet S2 to verify the existing foundation is suitable and meets criteria.)
3. Connector Type "F" should be used as an alternative only if joists have blocking on both sides and where accessibility makes the use of Types "D" or "E" impractical.
4. Any of the connectors listed within a particular group and as shown on Sheet S3 may be used for strengthening the particular condition.
5. This Plan Set was developed using the lowest listed manufacturer's capacity within a particular group. Required number of connectors on the Earthquake Retrofit Schedule may be found to have an acceptable spacing where an alternate connector is used. Any such substitution can only be designed or specified by a Registered Design Professional.
6. Foundation sill anchor types A, B, and C should not be used with cripple walls over 2 feet.

INSTRUCTIONS

① Locate the section that matches your home's construction. Use the flowchart on Sheet S3 to determine "Weight Category".

② Find the home's Total Floor Area in the schedule, this number should be at least as large as the number listed below. Do not use a smaller number, even if it is closer.

a. Approximate 1st floor area over crawlspace: _____
(Do not include areas built over slab-on-grade.)

③ Check the box that matches your home's construction type, number of stories, and total floor area. You will use information in this row of the schedule to determine length of wood structural panels, nailing requirements, quantities of hardware, etc.

④ Measure the maximum height of the cripple wall along each wall line of the house.

⑤ Determine the length of wood structural panel bracing required. The columns contain the length of required bracing, depending on the height of the cripple wall. The length of bracing is given for cripple wall heights of zero to 1', 1' to 2', 2' to 4', 4' to 6', and 6' to 7'. Furthermore, choices are given for bracing without tie-downs and with tie-downs. If the cripple wall height changes along the length of the wall, use the tallest height to determine the required bracing length. Follow the row across from the total floor area that you checked for your home (in Step 2) to find the bracing length for the cripple wall height on each side of the house. Review General Notes, Sheet S1, Section J for instructions at non-rectangular "T" or "L" shaped dwellings. Check boxes where Special Provisions apply.

⑥ Determine the number of Foundation Sill Anchors required. The columns show the number of anchors required, depending on whether you use Types A through C, or 1/2"ø or 5/8"ø anchor bolts. (ø = diameter of the bolts.) See Sheet S3.

⑦ Determine the number of Floor to Cripple Wall or Foundation Sill connectors. The columns indicate how many framing connectors are required, depending on whether you use Types D, E, F, or G. See Sheet S3.

⑧ Complete the Retrofit Summary for your project. Fill in the lengths found in ⑤. Check the boxes for the anchor and connector types you plan to use. The length of new cripple wall sheathing should be distributed along a wall line either in one full length or in a maximum of two panel lengths of approximately equal length (offset walls can have three). If you intend to use tie-downs, check the box for tie-downs for each wall line where use is intended. Check the box on line 4, and read the Supplemental Technical Notes for additional information. Where the length of required panel does not fit within the available length, the dwelling must have an engineered solution. Alternately, if 100% of the length along any particular wall can be sheathed, then that wall line shall be considered acceptable and an engineered solution is not required.

⑧ RETROFIT SUMMARY

BRACING, ANCHORS, CONNECTORS, AND TIE-DOWNS

1. Minimum required length of Wood Structural Panels per wall line: (check boxes where condition applies)
   North Wall _____ft x2 ☐ with tie-downs ☐ with Special Provisions
   East Wall _____ft x2 ☐ with tie-downs ☐ with Special Provisions
   South Wall _____ft x2 ☐ with tie-downs ☐ with Special Provisions
   West Wall _____ft x2 ☐ with tie-downs ☐ with Special Provisions
2. Panel Edge Nailing _____" on center.
3. New Foundation Sill Anchorage: — Additional types/quantity (if used):
   North Wall Type: _____ Min required:_____ — Type: _____ Min required:_____
   East Wall Type: _____ Min required:_____ — Type: _____ Min required:_____
   South Wall Type: _____ Min required:_____ — Type: _____ Min required:_____
   West Wall Type: _____ Min required:_____ — Type: _____ Min required:_____
4. Floor Framing Connectors (to Cripple Wall or Foundation Sill): — Additional types/quantity (if used):
   North Wall Type: _____ Min required:_____ — Type: _____ Min required:_____
   East Wall Type: _____ Min required:_____ — Type: _____ Min required:_____
   South Wall Type: _____ Min required:_____ — Type: _____ Min required:_____
   West Wall Type: _____ Min required:_____ — Type: _____ Min required:_____
5. ☐ Check this box if tie-downs and SUPPLEMENTAL TECHNICAL NOTES on Sheet S2 will be used.

APPLICANT: _____

PROPERTY ADDRESS: _____

Earthquake Retrofit Schedule
S_{DS} = 1.0 One-Story

Retrofit of Crawlspace Dwellings (Plan Set)
Vulnerability-Based Seismic Assessment and Retrofit of One- and Two-Family Dwellings
FEMA P-1100, Volume 2 - Plan Sets
Issued: SEPT 2019

FEMA

Date:

Sheet:

S3.1

EARTHQUAKE RETROFIT SCHEDULE (S_{DS}= 1.2 High Seismic) ONE-STORY

① Weight Category	② Total Area in Square Feet	③ Mark row that applies ☒	⑤ Length Each of Two Braced Wall Sections Required Along Each Perimeter Wall Line — Wood Structural Panels — ④ Cripple Wall Height: up to 1' Without Tie-downs	1'-1" to 2' Without Tie-downs	2'-1" to 4'-0" Without Tie-downs	2'-1" to 4'-0" With Tie-downs	4'-1" to 6'-0" Without Tie-downs	4'-1" to 6'-0" With Tie-downs	6'-1" to 7'-0" Without Tie-downs	6'-1" to 7'-0" With Tie-downs	Panel Edge Nailing	Number of Foundation Connectors or Anchors at Each Perimeter Wall Line Assume Distributed Along Length — ⑥ Foundation Sill Anchors: Type "A"	Type "B"	Type "C"	1/2"ø Bolt	5/8"ø Bolt	⑦ Floor to Cripple Wall or Floor to Foundation Sill: Type "D"	Type "E" or "F"	Type "G"
1-Story Light Construction	up to 800		6.7'	6.7'	8.0'	6.7'	10.7'	6.7'	10.7'	8.0'	4"	5	8	8	8	6	13	12	16
	801 to 1000		6.7'	8.0'	9.3'	6.7'	12.0'	8.0'	12.0'	8.0'	4"	6	9	10	10	7	15	15	19
	1001 to 1200		8.0'	8.0'	10.7'	8.0'	13.3'	9.3'	13.3'	9.3'	4"	7	11	12	12	8	18	17	22
	1201 to 1500		9.3'	9.3'	12.0'	9.3'	14.7'	10.7'	16.0'	10.7'	4"	8	13	14	14	10	21	20	27
	1501 to 2000		12.0'	12.0'	14.7'	12.0'	17.3'	12.0'	18.7'	13.3'	4"	10	16	18	18	12	27	26	34
	2001 to 2500		14.7'	14.7'	17.3'	14.7'	20.0'	14.7'	21.3'	16.0'	4"	12	19	21	21	15	33	31	41
	2501 to 3000		17.3'	17.3'	18.7'	17.3'	21.3'	17.3'	22.7'	17.3'	4"	14	23	25	25	17	38	37	48
1-Story Medium Construction	up to 800		5.3'	6.7'	9.3'	6.7'	10.7'	8.0'	12.0'	8.0'	3"	6	9	10	10	7	15	15	19
	801 to 1000		6.7'	8.0'	10.7'	6.7'	12.0'	8.0'	13.3'	9.3'	3"	7	11	12	12	8	18	17	23
	1001 to 1200		8.0'	8.0'	10.7'	8.0'	13.3'	9.3'	14.7'	10.7'	3"	8	12	13	13	9	21	20	26
	1201 to 1500		9.3'	9.3'	12.0'	9.3'	14.7'	10.7'	16.0'	12.0'	3"	9	15	16	16	11	24	23	31
	1501 to 2000		10.7'	12.0'	14.7'	10.7'	17.3'	13.3'	18.7'	14.7'	3"	12	18	20	20	14	30	29	39
	2001 to 2500		13.3'	13.3'	17.3'	13.3'	20.0'	14.7'	21.3'	16.0'	3"	14	22	24	24	16	36	35	46
	2501 to 3000		14.7'	14.7'	18.7'	14.7'	21.3'	17.3'	22.7'	18.7'	3"	16	25	27	27	19	42	40	53
1-Story Heavy Construction	up to 800		6.7'	8.0'	9.3'	6.7'	12.0'	8.0'	12.0'	9.3'	2"	7	10	11	11	8	17	17	22
	801 to 1000		6.7'	8.0'	10.7'	8.0'	13.3'	9.3'	14.7'	10.7'	2"	8	12	14	13	9	21	20	26
	1001 to 1200		8.0'	9.3'	12.0'	9.3'	14.7'	10.7'	16.0'	12.0'	2"	9	14	16	15	11	24	23	30
	1201 to 1500		9.3'	10.7'	13.3'	10.7'	16.0'	12.0'	17.3'	13.3'	2"	11	17	18	18	13	28	27	36
	1501 to 2000		10.7'	13.3'	16.0'	12.0'	18.7'	14.7'	20.0'	16.0'	2"	13	21	23	23	16	36	34	45
	2001 to 2500		13.3'	14.7'	18.7'	13.3'	21.3'	16.0'	22.7'	17.3'	2"	16	25	28	28	19	43	41	54
	2501 to 3000		14.7'	16.0'	20.0'	16.0'	22.7'	18.7'	25.3'	20.0'	2"	19	29	32	32	22	50	48	63

Notes:

1. Anchor bolts and Connectors shown in the Earthquake Retrofit Schedule are the minimum required per wall line, placed within the length of strengthening where possible and spaced as equally along each wall line as possible. Note that where using 1/2" or 5/8" bolts, one additional anchor is required at the end of each braced wall panel per Sheet D4.
2. Tie-downs: If your foundation meets the criteria, you may choose the tie-down option to decrease the required length of strengthening. This may be required where the length of the wall without tie-downs specified in this schedule is longer than can be accommodated by existing conditions. However, there is a level of uncertainty when dealing with existing foundations, therefore, where possible, longer lengths of strengthening, without tie-downs, are preferred. (See Supplemental Technical Notes, Sheet S2 to verify the existing foundation is suitable and meets criteria.)
3. Connector Type "F" should be used as an alternative only if joists have blocking on both sides and where accessibility makes the use of Types "D" or "E" impractical.
4. Any of the connectors listed within a particular group and as shown on Sheet S3 may be used for strengthening the particular condition.
5. This Plan Set was developed using the lowest listed manufacturer's capacity within a particular group. Required number of connectors on the Earthquake Retrofit Schedule may be found to have an acceptable spacing where an alternate connector is used. Any such substitution can only be designed or specified by a Registered Design Professional.
6. Foundation sill anchor types A, B, and C should not be used with cripple walls over 2 feet.

INSTRUCTIONS

① Locate the section that matches your home's construction. Use the flowchart on Sheet S3 to determine "Weight Category".

② Find the home's Total Floor Area in the schedule, this number should be at least as large as the number listed below. Do not use a smaller number, even if it is closer.

a. Approximate 1st floor area over crawlspace: _____
(Do not include areas built over slab-on-grade.)

③ Check the box that matches your home's construction type, number of stories, and total floor area. You will use information in this row of the schedule to determine length of wood structural panels, nailing requirements, quantities of hardware, etc.

④ Measure the maximum height of the cripple wall along each wall line of the house.

⑤ Determine the length of wood structural panel bracing required. The columns contain the length of required bracing, depending on the height of the cripple wall. The length of bracing is given for cripple wall heights of zero to 1', 1' to 2', 2' to 4', 4' to 6', and 6' to 7'. Furthermore, choices are given for bracing without tie-downs and with tie-downs. If the cripple wall height changes along the length of the wall, use the tallest height to determine the required bracing length. Follow the row across from the total floor area that you checked for your home (in Step 2) to find the bracing length for the cripple wall height on each side of the house. Review General Notes, Sheet S1, Section J for instructions at non-rectangular "T" or "L" shaped dwellings. Check boxes where Special Provisions apply.

⑥ Determine the number of Foundation Sill Anchors required. The columns show the number of anchors required, depending on whether you use Types A through C, or 1/2"ø or 5/8"ø anchor bolts. (ø = diameter of the bolts.) See Sheet S3.

⑦ Determine the number of Floor to Cripple Wall or Foundation Sill connectors. The columns indicate how many framing connectors are required, depending on whether you use Types D, E, F, or G. See Sheet S3.

⑧ Complete the Retrofit Summary for your project. Fill in the lengths found in ⑤. Check the boxes for the anchor and connector types you plan to use. The length of new cripple wall sheathing should be distributed along a wall line either in one full length or in a maximum of two panel lengths of approximately equal length (offset walls can have three). If you intend to use tie-downs, check the box for tie-downs for each wall line where use is intended. Check the box on line 4, and read the Supplemental Technical Notes for additional information. Where the length of required panel does not fit within the available length, the dwelling must have an engineered solution. Alternately, if 100% of the length along any particular wall can be sheathed, then that wall line shall be considered acceptable and an engineered solution is not required.

⑧ RETROFIT SUMMARY

BRACING, ANCHORS, CONNECTORS, AND TIE-DOWNS

1. Minimum required length of Wood Structural Panels per wall line: (check boxes where condition applies)
   North Wall _____ft x2 ☐ with tie-downs ☐ with Special Provisions
   East Wall _____ft x2 ☐ with tie-downs ☐ with Special Provisions
   South Wall _____ft x2 ☐ with tie-downs ☐ with Special Provisions
   West Wall _____ft x2 ☐ with tie-downs ☐ with Special Provisions
2. Panel Edge Nailing _____" on center.
3. New Foundation Sill Anchorage: — Additional types/quantity (if used):
   North Wall Type: _____ Min required:_____ — Type: _____ Min required:_____
   East Wall Type: _____ Min required:_____ — Type: _____ Min required:_____
   South Wall Type: _____ Min required:_____ — Type: _____ Min required:_____
   West Wall Type: _____ Min required:_____ — Type: _____ Min required:_____
4. Floor Framing Connectors (to Cripple Wall or Foundation Sill): — Additional types/quantity (if used):
   North Wall Type: _____ Min required:_____ — Type: _____ Min required:_____
   East Wall Type: _____ Min required:_____ — Type: _____ Min required:_____
   South Wall Type: _____ Min required:_____ — Type: _____ Min required:_____
   West Wall Type: _____ Min required:_____ — Type: _____ Min required:_____
5. ☐ Check this box if tie-downs and SUPPLEMENTAL TECHNICAL NOTES on Sheet S2 will be used.

APPLICANT: _____

PROPERTY ADDRESS: _____

Earthquake Retrofit Schedule
S_{DS} = 1.2 One-Story

Retrofit of Crawlspace Dwellings (Plan Set)
Vulnerability-Based Seismic Assessment and Retrofit of One- and Two-Family Dwellings
FEMA P-1100, Volume 2 - Plan Sets
Issued: SEPT 2019

FEMA

Date:

Sheet:

S3.1

EARTHQUAKE RETROFIT SCHEDULE (S_{DS}= 1.5 Very High Seismic) ONE-STORY

① Weight Category	② Total Area in Square Feet	③ Mark row that applies ☒	⑤ Length Each of Two Braced Wall Sections Required Along Each Perimeter Wall Line — Wood Structural Panels — ④ Cripple Wall Height: up to 1' Without Tie-downs	1'-1" to 2' Without Tie-downs	2'-1" to 4'-0" Without Tie-downs	2'-1" to 4'-0" With Tie-downs	4'-1" to 6'-0" Without Tie-downs	4'-1" to 6'-0" With Tie-downs	6'-1" to 7'-0" Without Tie-downs	6'-1" to 7'-0" With Tie-downs	Panel Edge Nailing	Number of Foundation Connectors or Anchors at Each Perimeter Wall Line Assume Distributed Along Length — ⑥ Foundation Sill Anchors: Type "A"	Type "B"	Type "C"	1/2"ø Bolt	5/8"ø Bolt	⑦ Floor to Cripple Wall or Floor to Foundation Sill: Type "D"	Type "E" or "F"	Type "G"
1-Story Light Construction	up to 800		8.0'	8.0'	10.7'	8.0'	12.0'	8.0'	13.3'	9.3'	4"	6	10	10	10	7	16	15	20
	801 to 1000		9.3'	9.3'	12.0'	9.3'	13.3'	9.3'	14.7'	10.7'	4"	7	11	12	12	9	19	18	24
	1001 to 1200		10.7'	10.7'	13.3'	10.7'	16.0'	10.7'	16.0'	12.0'	4"	8	13	14	14	10	22	21	28
	1201 to 1500		12.0'	12.0'	14.7'	12.0'	17.3'	12.0'	18.7'	13.3'	4"	10	16	17	17	12	26	25	33
	1501 to 2000		14.7'	14.7'	17.3'	14.7'	21.3'	16.0'	22.7'	16.0'	4"	13	20	22	22	15	34	32	43
	2001 to 2500		18.7'	18.7'	20.0'	18.7'	24.0'	18.7'	25.3'	18.7'	4"	15	24	27	27	18	41	39	52
	2501 to 3000		21.3'	21.3'	22.7'	21.3'	26.7'	21.3'	28.0'	21.3'	4"	18	28	31	31	21	48	46	60
1-Story Medium Construction	up to 800		6.7'	8.0'	10.7'	6.7'	13.3'	9.3'	13.3'	9.3'	3"	7	11	12	12	9	19	18	24
	801 to 1000		8.0'	9.3'	12.0'	8.0'	14.7'	10.7'	16.0'	10.7'	3"	9	13	15	15	10	22	21	28
	1001 to 1200		9.3'	10.7'	13.3'	9.3'	16.0'	12.0'	17.3'	12.0'	3"	10	15	17	17	11	26	25	32
	1201 to 1500		10.7'	12.0'	14.7'	10.7'	17.3'	13.3'	18.7'	14.7'	3"	12	18	20	20	14	30	29	38
	1501 to 2000		13.3'	13.3'	17.3'	13.3'	21.3'	16.0'	22.7'	17.3'	3"	14	23	25	25	17	38	36	48
	2001 to 2500		16.0'	16.0'	20.0'	16.0'	22.7'	17.3'	25.3'	20.0'	3"	17	27	29	29	20	45	43	57
	2501 to 3000		18.7'	18.7'	21.3'	18.7'	25.3'	20.0'	26.7'	21.3'	3"	20	31	34	34	23	53	50	67
1-Story Heavy Construction	up to 800		8.0'	9.3'	12.0'	8.0'	13.3	10.7'	14.7'	10.7'	2"	8	13	14	14	10	22	21	27
	801 to 1000		8.0'	10.7'	13.3'	9.3'	16.0'	12.0'	17.3'	12.0'	2"	10	15	17	17	11	26	25	33
	1001 to 1200		9.3'	12.0'	14.7'	10.7'	17.3'	13.3'	18.7'	13.3'	2"	11	18	19	19	13	30	28	37
	1201 to 1500		10.7'	13.3	16.0'	12.0'	18.7'	14.7'	20.0'	16.0'	2"	13	21	23	23	16	35	34	45
	1501 to 2000		13.3	16.0'	18.7'	14.7'	22.7'	17.3'	24.0'	18.7'	2"	17	26	29	29	20	44	43	56
	2001 to 2500		14.7'	17.3'	21.3'	16.0'	25.3'	20.0'	26.7'	21.3'	2"	20	32	35	34	24	53	51	67
	2501 to 3000		17.3'	20.0'	24.0'	18.7'	28.0'	22.7'	29.3'	24.0'	2"	23	37	40	40	27	62	59	79

Notes:

1. Anchor bolts and Connectors shown in the Earthquake Retrofit Schedule are the minimum required per wall line, placed within the length of strengthening where possible and spaced as equally along each wall line as possible. Note that where using 1/2" or 5/8" bolts, one additional anchor is required at the end of each braced wall panel per Sheet D4.
2. Tie-downs: If your foundation meets the criteria, you may choose the tie-down option to decrease the required length of strengthening. This may be required where the length of the wall without tie-downs specified in this schedule is longer than can be accommodated by existing conditions. However, there is a level of uncertainty when dealing with existing foundations, therefore, where possible, longer lengths of strengthening, without tie-downs, are preferred. (See Supplemental Technical Notes, Sheet S2 to verify the existing foundation is suitable and meets criteria.)
3. Connector Type "F" should be used as an alternative only if joists have blocking on both sides and where accessibility makes the use of Types "D" or "E" impractical.
4. Any of the connectors listed within a particular group and as shown on Sheet S3 may be used for strengthening the particular condition.
5. This Plan Set was developed using the lowest listed manufacturer's capacity within a particular group. Required number of connectors on the Earthquake Retrofit Schedule may be found to have an acceptable spacing where an alternate connector is used. Any such substitution can only be designed or specified by a Registered Design Professional.
6. Foundation sill anchor types A, B, and C should not be used with cripple walls over 2 feet.

INSTRUCTIONS

① Locate the section that matches your home's construction. Use the flowchart on Sheet S3 to determine "Weight Category".

② Find the home's Total Floor Area in the schedule, this number should be at least as large as the number listed below. Do not use a smaller number, even if it is closer.

a. Approximate 1st floor area over crawlspace: _____
(Do not include areas built over slab-on-grade.)

③ Check the box that matches your home's construction type, number of stories, and total floor area. You will use information in this row of the schedule to determine length of wood structural panels, nailing requirements, quantities of hardware, etc.

④ Measure the maximum height of the cripple wall along each wall line of the house.

⑤ Determine the length of wood structural panel bracing required. The columns contain the length of required bracing, depending on the height of the cripple wall. The length of bracing is given for cripple wall heights of zero to 1', 1' to 2', 2' to 4', 4' to 6', and 6' to 7'. Furthermore, choices are given for bracing without tie-downs and with tie-downs. If the cripple wall height changes along the length of the wall, use the tallest height to determine the required bracing length. Follow the row across from the total floor area that you checked for your home (in Step 2) to find the bracing length for the cripple wall height on each side of the house. Review General Notes, Sheet S1, Section J for instructions at non-rectangular "T" or "L" shaped dwellings. Check boxes where Special Provisions apply.

⑥ Determine the number of Foundation Sill Anchors required. The columns show the number of anchors required, depending on whether you use Types A through C, or 1/2"ø or 5/8"ø anchor bolts. (ø = diameter of the bolts.) See Sheet S3.

⑦ Determine the number of Floor to Cripple Wall or Foundation Sill connectors. The columns indicate how many framing connectors are required, depending on whether you use Types D, E, F, or G. See Sheet S3.

⑧ Complete the Retrofit Summary for your project. Fill in the lengths found in ⑤. Check the boxes for the anchor and connector types you plan to use. The length of new cripple wall sheathing should be distributed along a wall line either in one full length or in a maximum of two panel lengths of approximately equal length (offset walls can have three). If you intend to use tie-downs, check the box for tie-downs for each wall line where use is intended. Check the box on line 4, and read the Supplemental Technical Notes for additional information. Where the length of required panel does not fit within the available length, the dwelling must have an engineered solution. Alternately, if 100% of the length along any particular wall can be sheathed, then that wall line shall be considered acceptable and an engineered solution is not required.

⑧

RETROFIT SUMMARY

BRACING, ANCHORS, CONNECTORS, AND TIE-DOWNS

1. Minimum required length of Wood Structural Panels per wall line: (check boxes where condition applies)
   North Wall _____ft x2 ☐ with tie-downs ☐ with Special Provisions
   East Wall _____ft x2 ☐ with tie-downs ☐ with Special Provisions
   South Wall _____ft x2 ☐ with tie-downs ☐ with Special Provisions
   West Wall _____ft x2 ☐ with tie-downs ☐ with Special Provisions
2. Panel Edge Nailing _____" on center.
3. New Foundation Sill Anchorage: — Additional types/quantity (if used):
   North Wall Type: _____ Min required:_____ — Type: _____ Min required:_____
   East Wall Type: _____ Min required:_____ — Type: _____ Min required:_____
   South Wall Type: _____ Min required:_____ — Type: _____ Min required:_____
   West Wall Type: _____ Min required:_____ — Type: _____ Min required:_____
4. Floor Framing Connectors (to Cripple Wall or Foundation Sill): — Additional types/quantity (if used):
   North Wall Type: _____ Min required:_____ — Type: _____ Min required:_____
   East Wall Type: _____ Min required:_____ — Type: _____ Min required:_____
   South Wall Type: _____ Min required:_____ — Type: _____ Min required:_____
   West Wall Type: _____ Min required:_____ — Type: _____ Min required:_____
5. ☐ Check this box if tie-downs and SUPPLEMENTAL TECHNICAL NOTES on Sheet S2 will be used.

APPLICANT: _____

PROPERTY ADDRESS: _____

Earthquake Retrofit Schedule
S_{DS} = 1.5 One-Story

Retrofit of Crawlspace Dwellings (Plan Set)
Vulnerability-Based Seismic Assessment and Retrofit of
One- and Two-Family Dwellings
FEMA P-1100, Volume 2 - Plan Sets
Issued: SEPT 2019

FEMA

Date:

Sheet:

S3.1

EARTHQUAKE RETROFIT SCHEDULE (S_{DS}= 1.0 Seismic) TWO-STORY

① Weight Category	② Total Area in Square Feet	③ Mark row that applies ☒	⑤ Length Each of Two Braced Wall Sections Required Along Each Perimeter Wall Line — Wood Structural Panels — ④ Cripple Wall Height: up to 1' Without Tie-downs	1'-1" to 2' Without Tie-downs	2'-1" to 4'-0" Without Tie-downs	2'-1" to 4'-0" With Tie-downs	4'-1" to 6'-0" Without Tie-downs	4'-1" to 6'-0" With Tie-downs	6'-1" to 7'-0" Without Tie-downs	6'-1" to 7'-0" With Tie-downs	Panel Edge Nailing	Number of Foundation Connectors or Anchors at Each Perimeter Wall Line Assume Distributed Along Length — ⑥ Foundation Sill Anchors: Type "A"	Type "B"	Type "C"	1/2"ø Bolt	5/8"ø Bolt	⑦ Floor to Cripple Wall or Floor to Foundation Sill: Type "D"	Type "E" or "F"	Type "G"
2-Story Light Construction	up to 1600		8.0'	8.0'	10.7'	8.0'	12.0'	9.3'	13.3'	9.3'	4"	7	10	11	11	8	17	17	22
	1601 to 2000		9.3'	9.3'	12.0'	9.3'	13.3'	10.7'	14.7'	10.7'	4"	8	12	13	13	9	20	19	26
	2001 to 2400		10.7'	10.7'	13.3'	10.7'	14.7'	10.7'	16.0'	12.0'	4"	9	14	15	15	10	23	22	29
	2401 to 3000		12.0'	12.0'	14.7'	12.0'	17.3'	13.3'	18.7'	13.3'	4"	10	16	18	18	12	27	26	34
	3001 to 4000		14.7'	14.7'	17.3'	16.0'	20.0'	16.0'	21.3'	16.0'	4"	13	20	22	22	15	34	32	43
2-Story Medium Construction	up to 1600		8.0'	9.3'	10.7'	8.0'	13.3'	9.3'	13.3'	10.7'	3"	7	11	12	12	9	19	18	24
	1601 to 2000		9.3'	10.7'	12.0'	9.3'	14.7'	10.7'	14.7'	12.0'	3"	9	13	15	15	10	22	22	28
	2001 to 2400		9.3'	10.7'	13.3'	10.7'	16.0'	12.0'	16.0'	13.3'	3"	10	15	17	17	11	26	25	32
	2401 to 3000		10.7'	12.0'	14.7'	12.0'	17.3'	13.3'	18.7'	14.7'	3"	12	18	20	20	14	30	29	39
	3001 to 4000		13.3'	14.7'	17.3'	13.3'	20.0'	16.0'	21.3'	17.3'	3"	14	23	25	25	17	38	36	48
2-Story Heavy Construction	up to 1600		9.3'	9.3'	12.0'	9.3'	13.3'	10.7'	14.7'	12.0'	2"	9	14	16	16	11	24	23	30
	1601 to 2000		9.3'	10.7'	13.3'	10.7'	14.7'	12.0'	16.0'	13.3'	2"	11	17	18	18	13	28	27	35
	2001 to 2400		10.7'	12.0'	14.7'	10.7'	16.0'	13.3'	17.3'	14.7'	2"	12	19	21	21	14	32	31	41
	2401 to 3000		12.0'	13.3'	16.0'	13.3'	18.7'	14.7'	18.7'	16.0'	2"	14	23	25	25	17	38	37	48
	3001 to 4000		13.3'	16.0'	18.7'	14.7'	21.3'	17.3'	22.7'	18.7'	2"	18	28	31	31	21	48	46	60

Notes:

1. Anchor bolts and Connectors shown in the Earthquake Retrofit Schedule are the minimum required per wall line, placed within the length of strengthening where possible and spaced as equally along each wall line as possible. Note that where using 1/2" or 5/8" bolts, one additional anchor is required at the end of each braced wall panel per Sheet D4.
2. Tie-downs: If your foundation meets the criteria, you may choose the tie-down option to decrease the required length of strengthening. This may be required where the length of the wall without tie-downs specified in this schedule is longer than can be accommodated by existing conditions. However, there is a level of uncertainty when dealing with existing foundations, therefore, where possible, longer lengths of strengthening, without tie-downs, are preferred. (See Supplemental Technical Notes, Sheet S2 to verify the existing foundation is suitable and meets criteria.)
3. Connector Type "F" should be used as an alternative only if joists have blocking on both sides and where accessibility makes the use of Types "D" or "E" impractical.
4. Any of the connectors listed within a particular group and as shown on Sheet S3 may be used for strengthening the particular condition.
5. This Plan Set was developed using the lowest listed manufacturer's capacity within a particular group. Required number of connectors on the Earthquake Retrofit Schedule may be found to have an acceptable spacing where an alternate connector is used. Any such substitution can only be designed or specified by a Registered Design Professional.
6. Foundation sill anchor types A, B, and C should not be used with cripple walls over 2 feet.

INSTRUCTIONS

① Locate the section that matches your home's construction. Use the chart on Sheet S3 to determine "Weight Category".

② Find the home's Total Floor Area in the schedule, this number should be at least as large as the number calculated in 2.c. Do not use a smaller number, even if it is closer.

a. Approximate 1st floor area over crawl space: _____
(Do not include areas built over slab-on-grade.)
b. Approximate 2nd floor area over crawl space: _____
(Do not include areas where the 1st floors over slab-on-grade.)
c. Total approximate square footage: _____
(line a + line b)

③ Check the box that matches your home's construction type, number of stories, and total floor area. You will use information in this row of the schedule to determine length of wood structural panels, nailing requirements, quantities of hardware, etc.

④ Measure the maximum height of the cripple wall along each wall line of the house.

⑤ Determine the length of wood structural panel bracing required. The columns contain the length of required bracing, depending on the height of the cripple wall. The length of bracing is given for cripple wall heights of zero to 1', 1' to 2', 2' to 4', 4' to 6', and 6' to 7'. Furthermore, choices are given for bracing without tie-downs and with tie-downs. If the cripple wall height changes along the length of the wall, use the tallest height to determine the required bracing length. Follow the row across from the total floor area that you checked for your home (in Step 3) to find the bracing length for the cripple wall height on each side of the house. Review General Notes, Sheet S1, Section J for instructions at non-rectangular "T" or "L" shaped dwellings. Check boxes where Special Provisions apply.

⑥ Determine the number of Foundation Sill Anchors required. The columns show the number of anchors required, depending on whether you use Types A through C, or 1/2"ø or 5/8"ø anchor bolts. (ø = diameter of the bolts.) See Sheet S3.

⑦ Determine the number of Floor to Cripple Wall or Foundation Sill connectors. The columns indicate how many framing connectors are required, depending on whether you use Types D, E, F, or G. See Sheet S3.

⑧ Complete the Retrofit Summary for your project. Fill in the lengths of Wood Structural Panels found in ⑤. Fill in the type and quantity of anchors used on each wall line. The length of new cripple wall sheathing should be distributed along a wall line either in one full length or in a maximum of two panel lengths of approximately equal length (offset walls can have three). If you intend to use tie-downs, check the box for tie-downs for each wall line where use is intended. Check the box on line 5, and read the Supplemental Technical Notes for additional information. Where the length of required panel does not fit within the available length, the dwelling must have an engineered solution. Alternately, if 100% of the length along any particular wall can be sheathed, then that wall line shall be considered acceptable and an engineered solution is not required.

⑧

RETROFIT SUMMARY

BRACING, ANCHORS, CONNECTORS, AND TIE-DOWNS

1. Minimum required length of Wood Structural Panels per wall line: (check boxes where condition applies)
   North Wall _____ft x2 ☐ with tie-downs ☐ with Special Provisions
   East Wall _____ft x2 ☐ with tie-downs ☐ with Special Provisions
   South Wall _____ft x2 ☐ with tie-downs ☐ with Special Provisions
   West Wall _____ft x2 ☐ with tie-downs ☐ with Special Provisions
2. Panel Edge Nailing _____" on center.
3. New Foundation Sill Anchorage: — Additional types/quantity (if used):
   North Wall Type: _____ Min required:_____ — Type: _____ Min required:_____
   East Wall Type: _____ Min required:_____ — Type: _____ Min required:_____
   South Wall Type: _____ Min required:_____ — Type: _____ Min required:_____
   West Wall Type: _____ Min required:_____ — Type: _____ Min required:_____
4. Floor Framing Connectors (to Cripple Wall or Foundation Sill): — Additional types/quantity (if used):
   North Wall Type: _____ Min required:_____ — Type: _____ Min required:_____
   East Wall Type: _____ Min required:_____ — Type: _____ Min required:_____
   South Wall Type: _____ Min required:_____ — Type: _____ Min required:_____
   West Wall Type: _____ Min required:_____ — Type: _____ Min required:_____
5. ☐ Check this box if tie-downs and SUPPLEMENTAL TECHNICAL NOTES on Sheet S2 will be used.

APPLICANT: _____

PROPERTY ADDRESS: _____

Earthquake Retrofit Schedule
Two-Story
S_{DS} = 1.0

Retrofit of Crawlspace Dwellings (Plan Set)
Vulnerability-Based Seismic Assessment and Retrofit of
One- and Two-Family Dwellings
FEMA P-1100, Volume 2 - Plan Sets
Issued: SEPT 2019

FEMA

Date:

Sheet:

S3.1

EARTHQUAKE RETROFIT SCHEDULE (S_{DS}= 1.2 High Seismic) TWO-STORY

① Weight Category	② Total Area in Square Feet	③ Mark row that applies ☒	⑤ Length Each of Two Braced Wall Sections Required Along Each Perimeter Wall Line — Wood Structural Panels — ④ Cripple Wall Height: up to 1' Without Tie-downs	1'-1" to 2' Without Tie-downs	2'-1" to 4'-0" Without Tie-downs	2'-1" to 4'-0" With Tie-downs	4'-1" to 6'-0" Without Tie-downs	4'-1" to 6'-0" With Tie-downs	6'-1" to 7'-0" Without Tie-downs	6'-1" to 7'-0" With Tie-downs	Panel Edge Nailing	Number of Foundation Connectors or Anchors at Each Perimeter Wall Line Assume Distributed Along Length — ⑥ Foundation Sill Anchors: Type "A"	Type "B"	Type "C"	1/2"ø Bolt	5/8"ø Bolt	⑦ Floor to Cripple Wall or Floor to Foundation Sill: Type "D"	Type "E" or "F"	Type "G"
2-Story Light Construction	up to 1600		9.3'	9.3'	12.0'	9.3'	14.7'	10.7'	16.0'	12.0'	4"	8	12	13	13	9	21	20	26
	1601 to 2000		10.7'	10.7'	13.3'	10.7'	16.0'	12.0'	17.3'	13.3'	4"	9	14	16	16	11	24	23	31
	2001 to 2400		12.0'	12.0'	14.7'	13.3'	17.3'	13.3'	18.7'	14.7'	4"	10	16	18	18	12	28	26	35
	2401 to 3000		14.7'	14.7'	16.0'	14.7'	20.0'	14.7'	20.0'	16.0'	4"	12	19	21	21	14	33	31	41
	3001 to 4000		17.3'	18.7'	18.7'	18.7'	22.7'	18.7'	24.0'	18.7'	4"	15	24	26	26	18	40	39	51
2-Story Medium Construction	up to 1600		9.3'	10.7'	12.0'	9.3'	14.7'	10.7'	16.0'	12.0'	3"	9	14	15	15	10	23	22	29
	1601 to 2000		10.7'	12.0'	13.3'	10.7'	16.0'	12.0'	17.3'	13.3'	3"	10	16	18	17	12	27	26	34
	2001 to 2400		10.7'	12.0'	14.7'	12.0'	17.3'	13.3'	18.7'	14.7'	3"	12	18	20	20	14	31	29	39
	2401 to 3000		13.3'	14.7'	17.3'	13.3'	20.0'	16.0'	21.3'	16.0'	3"	14	22	24	24	16	36	35	46
	3001 to 4000		16.0'	16.0'	20.0'	16.0'	22.7'	18.7'	24.0'	20.0'	3"	17	27	30	29	20	46	44	58
2-Story Heavy Construction	up to 1600		9.3'	10.7'	13.3'	10.7'	16.0'	12.0'	16.0'	13.3'	2"	11	17	19	18	13	28	27	36
	1601 to 2000		10.7'	12.0'	14.7'	12.0'	17.3'	13.3'	18.7'	14.7'	2"	13	20	22	22	15	34	32	42
	2001 to 2400		12.0'	13.3'	16.0'	13.3'	18.7'	14.7'	20.0'	16.0'	2"	15	23	25	25	17	38	37	49
	2401 to 3000		13.3'	14.7'	18.7'	14.7'	21.3'	17.3'	21.3'	18.7'	2"	17	27	30	29	20	46	44	58
	3001 to 4000		16.0'	17.3'	21.3'	17.3'	24.0'	20.0'	25.3'	21.3'	2"	21	34	37	37	25	57	55	72

Notes:

1. Anchor bolts and Connectors shown in the Earthquake Retrofit Schedule are the minimum required per wall line, placed within the length of strengthening where possible and spaced as equally along each wall line as possible. Note that where using 1/2" or 5/8" bolts, one additional anchor is required at the end of each braced wall panel per Sheet D4.
2. Tie-downs: If your foundation meets the criteria, you may choose the tie-down option to decrease the required length of strengthening. This may be required where the length of the wall without tie-downs specified in this schedule is longer than can be accommodated by existing conditions. However, there is a level of uncertainty when dealing with existing foundations, therefore, where possible, longer lengths of strengthening, without tie-downs, are preferred. (See Supplemental Technical Notes, Sheet S2 to verify the existing foundation is suitable and meets criteria.)
3. Connector Type "F" should be used as an alternative only if joists have blocking on both sides and where accessibility makes the use of Types "D" or "E" impractical.
4. Any of the connectors listed within a particular group and as shown on Sheet S3 may be used for strengthening the particular condition.
5. This Plan Set was developed using the lowest listed manufacturer's capacity within a particular group. Required number of connectors on the Earthquake Retrofit Schedule may be found to have an acceptable spacing where an alternate connector is used. Any such substitution can only be designed or specified by a Registered Design Professional.
6. Foundation sill anchor types A, B, and C should not be used with cripple walls over 2 feet.

INSTRUCTIONS

① Locate the section that matches your home's construction. Use the chart on Sheet S3 to determine "Weight Category".

② Find the home's Total Floor Area in the schedule, this number should be at least as large as the number calculated in 2.c. Do not use a smaller number, even if it is closer.

a. Approximate 1st floor area over crawl space: _____
(Do not include areas built over slab-on-grade.)
b. Approximate 2nd floor area over crawl space: _____
(Do not include areas where the 1st floors over slab-on-grade.)
c. Total approximate square footage: _____
(line a + line b)

③ Check the box that matches your home's construction type, number of stories, and total floor area. You will use information in this row of the schedule to determine length of wood structural panels, nailing requirements, quantities of hardware, etc.

④ Measure the maximum height of the cripple wall along each wall line of the house.

⑤ Determine the length of wood structural panel bracing required. The columns contain the length of required bracing, depending on the height of the cripple wall. The length of bracing is given for cripple wall heights of zero to 1', 1' to 2', 2' to 4', 4' to 6', and 6' to 7'. Furthermore, choices are given for bracing without tie-downs and with tie-downs. If the cripple wall height changes along the length of the wall, use the tallest height to determine the required bracing length. Follow the row across from the total floor area that you checked for your home (in Step 3) to find the bracing length for the cripple wall height on each side of the house. Review General Notes, Sheet S1, Section J for instructions at non-rectangular "T" or "L" shaped dwellings. Check boxes where Special Provisions apply.

⑥ Determine the number of Foundation Sill Anchors required. The columns show the number of anchors required, depending on whether you use Types A through C, or 1/2"ø or 5/8"ø anchor bolts. (ø = diameter of the bolts.) See Sheet S3.

⑦ Determine the number of Floor to Cripple Wall or Foundation Sill connectors. The columns indicate how many framing connectors are required, depending on whether you use Types D, E, F, or G. See Sheet S3.

⑧ Complete the Retrofit Summary for your project. Fill in the lengths of Wood Structural Panels found in ⑤. Fill in the type and quantity of anchors used on each wall line. The length of new cripple wall sheathing should be distributed along a wall line either in one full length or in a maximum of two panel lengths of approximately equal length (offset walls can have three). If you intend to use tie-downs, check the box for tie-downs for each wall line where use is intended. Check the box on line 5, and read the Supplemental Technical Notes for additional information. Where the length of required panel does not fit within the available length, the dwelling must have an engineered solution. Alternately, if 100% of the length along any particular wall can be sheathed, then that wall line shall be considered acceptable and an engineered solution is not required.

⑧ RETROFIT SUMMARY

BRACING, ANCHORS, CONNECTORS, AND TIE-DOWNS

1. Minimum required length of Wood Structural Panels per wall line: (check boxes where condition applies)
   North Wall _____ft x2 ☐ with tie-downs ☐ with Special Provisions
   East Wall _____ft x2 ☐ with tie-downs ☐ with Special Provisions
   South Wall _____ft x2 ☐ with tie-downs ☐ with Special Provisions
   West Wall _____ft x2 ☐ with tie-downs ☐ with Special Provisions
2. Panel Edge Nailing _____" on center.
3. New Foundation Sill Anchorage: — Additional types/quantity (if used):
   North Wall Type: _____ Min required:_____ — Type: _____ Min required:_____
   East Wall Type: _____ Min required:_____ — Type: _____ Min required:_____
   South Wall Type: _____ Min required:_____ — Type: _____ Min required:_____
   West Wall Type: _____ Min required:_____ — Type: _____ Min required:_____
4. Floor Framing Connectors (to Cripple Wall or Foundation Sill): — Additional types/quantity (if used):
   North Wall Type: _____ Min required:_____ — Type: _____ Min required:_____
   East Wall Type: _____ Min required:_____ — Type: _____ Min required:_____
   South Wall Type: _____ Min required:_____ — Type: _____ Min required:_____
   West Wall Type: _____ Min required:_____ — Type: _____ Min required:_____
5. ☐ Check this box if tie-downs and SUPPLEMENTAL TECHNICAL NOTES on Sheet S2 will be used.

APPLICANT: _____

PROPERTY ADDRESS: _____

Earthquake Retrofit Schedule
Two-Story
S_{DS} = 1.2

Retrofit of Crawlspace Dwellings (Plan Set)
Vulnerability-Based Seismic Assessment and Retrofit of
One- and Two-Family Dwellings
FEMA P-1100, Volume 2 - Plan Sets
Issued: SEPT 2019

FEMA

Date:

Sheet:

S3.1

EARTHQUAKE RETROFIT SCHEDULE (S_{DS}= 1.5 Very High Seismic) TWO-STORY

① Weight Category	② Total Area in Square Feet	③ Mark row that applies ☒	⑤ Length Each of Two Braced Wall Sections Required Along Each Perimeter Wall Line — Wood Structural Panels — ④ Cripple Wall Height: up to 1' Without Tie-downs	1'-1" to 2' Without Tie-downs	2'-1" to 4'-0" Without Tie-downs	2'-1" to 4'-0" With Tie-downs	4'-1" to 6'-0" Without Tie-downs	4'-1" to 6'-0" With Tie-downs	6'-1" to 7'-0" Without Tie-downs	6'-1" to 7'-0" With Tie-downs	Panel Edge Nailing	Number of Foundation Connectors or Anchors at Each Perimeter Wall Line Assume Distributed Along Length — ⑥ Foundation Sill Anchors: Type "A"	Type "B"	Type "C"	1/2"ø Bolt	5/8"ø Bolt	⑦ Floor to Cripple Wall or Floor to Foundation Sill: Type "D"	Type "E" or "F"	Type "G"
2-Story Light Construction	up to 1600		12.0'	12.0'	14.7'	12.0'	17.3'	12.0'	18.7'	13.3'	4"	10	15	17	17	11	26	25	32
	1601 to 2000		13.3'	13.3'	16.0'	13.3'	18.7'	14.7'	20.0'	16.0'	4"	11	18	20	19	13	30	29	38
	2001 to 2400		14.7'	16.0'	17.3'	16.0'	21.3'	16.0'	22.7'	17.3'	4"	13	20	22	22	15	34	33	43
	2401 to 3000		18.7'	18.7'	20.0'	18.7'	22.7'	18.7'	24.0'	18.7'	4"	15	24	26	26	18	41	39	51
	3001 to 4000		22.7'	22.7'	22.7'	22.7'	26.7'	24.0'	28.0'	24.0'	4"	19	30	33	33	22	50	48	64
2-Story Medium Construction	up to 1600		10.7'	12.0'	14.7'	10.7'	17.3'	13.3'	18.7'	14.7'	3"	11	17	18	18	13	28	27	36
	1601 to 2000		12.0'	13.3'	16.0'	12.0'	18.7'	14.7'	20.0'	16.0'	3"	13	20	22	22	15	33	32	42
	2001 to 2400		13.3'	14.7'	18.7'	13.3'	21.3'	16.0'	22.7'	17.3'	3"	14	23	25	25	17	38	37	48
	2401 to 3000		16.0'	17.3'	20.0'	16.0'	22.7'	18.7'	24.0'	20.0'	3"	17	27	29	29	20	45	43	58
	3001 to 4000		20.0'	20.0'	22.7'	20.0'	26.7'	21.3'	28.0'	22.7'	3"	21	34	37	37	25	57	54	72
2-Story Heavy Construction	up to 1600		12.0'	13.3'	16.0'	12.0'	18.7'	14.7'	20.0'	16.0'	2"	13	21	23	23	16	35	34	45
	1601 to 2000		13.3'	14.7'	17.3'	14.7'	20.0'	16.0'	21.3'	17.3'	2"	16	25	27	27	19	42	40	53
	2001 to 2400		14.7'	16.0'	20.0'	16.0'	22.7'	18.7'	24.0'	18.7'	2"	18	28	31	31	21	48	46	61
	2401 to 3000		16.0'	18.7'	21.3'	17.3'	24.0'	20.0'	25.3'	21.3'	2"	21	34	37	37	25	57	55	72
	3001 to 4000		18.7'	21.3'	25.3'	20.0'	28.0'	24.0'	29.3'	25.3'	2"	27	42	46	46	31	71	68	90

Notes:

1. Anchor bolts and Connectors shown in the Earthquake Retrofit Schedule are the minimum required per wall line, placed within the length of strengthening where possible and spaced as equally along each wall line as possible. Note that where using 1/2" or 5/8" bolts, one additional anchor is required at the end of each braced wall panel per Sheet D4.
2. Tie-downs: If your foundation meets the criteria, you may choose the tie-down option to decrease the required length of strengthening. This may be required where the length of the wall without tie-downs specified in this schedule is longer than can be accommodated by existing conditions. However, there is a level of uncertainty when dealing with existing foundations, therefore, where possible, longer lengths of strengthening, without tie-downs, are preferred. (See Supplemental Technical Notes, Sheet S2 to verify the existing foundation is suitable and meets criteria.)
3. Connector Type "F" should be used as an alternative only if joists have blocking on both sides and where accessibility makes the use of Types "D" or "E" impractical.
4. Any of the connectors listed within a particular group and as shown on Sheet S3 may be used for strengthening the particular condition.
5. This Plan Set was developed using the lowest listed manufacturer's capacity within a particular group. Required number of connectors on the Earthquake Retrofit Schedule may be found to have an acceptable spacing where an alternate connector is used. Any such substitution can only be designed or specified by a Registered Design Professional.
6. Foundation sill anchor types A, B, and C should not be used with cripple walls over 2 feet.

INSTRUCTIONS

① Locate the section that matches your home's construction. Use the chart on Sheet S3 to determine "Weight Category".

② Find the home's Total Floor Area in the schedule, this number should be at least as large as the number calculated in 2.c. Do not use a smaller number, even if it is closer.

a. Approximate 1st floor area over crawl space: _____
(Do not include areas built over slab-on-grade.)
b. Approximate 2nd floor area over crawl space: _____
(Do not include areas where the 1st floors over slab-on-grade.)
c. Total approximate square footage: _____
(line a + line b)

③ Check the box that matches your home's construction type, number of stories, and total floor area. You will use information in this row of the schedule to determine length of wood structural panels, nailing requirements, quantities of hardware, etc.

④ Measure the maximum height of the cripple wall along each wall line of the house.

⑤ Determine the length of wood structural panel bracing required. The columns contain the length of required bracing, depending on the height of the cripple wall. The length of bracing is given for cripple wall heights of zero to 1', 1' to 2', 2' to 4', 4' to 6', and 6' to 7'. Furthermore, choices are given for bracing without tie-downs and with tie-downs. If the cripple wall height changes along the length of the wall, use the tallest height to determine the required bracing length. Follow the row across from the total floor area that you checked for your home (in Step 3) to find the bracing length for the cripple wall height on each side of the house. Review General Notes, Sheet S1, Section J for instructions at non-rectangular "T" or "L" shaped dwellings. Check boxes where Special Provisions apply.

⑥ Determine the number of Foundation Sill Anchors required. The columns show the number of anchors required, depending on whether you use Types A through C, or 1/2"ø or 5/8"ø anchor bolts. (ø = diameter of the bolts.) See Sheet S3.

⑦ Determine the number of Floor to Cripple Wall or Foundation Sill connectors. The columns indicate how many framing connectors are required, depending on whether you use Types D, E, F, or G. See Sheet S3.

⑧ Complete the Retrofit Summary for your project. Fill in the lengths of Wood Structural Panels found in ⑤. Fill in the type and quantity of anchors used on each wall line. The length of new cripple wall sheathing should be distributed along a wall line either in one full length or in a maximum of two panel lengths of approximately equal length (offset walls can have three). If you intend to use tie-downs, check the box for tie-downs for each wall line where use is intended. Check the box on line 5, and read the Supplemental Technical Notes for additional information. Where the length of required panel does not fit within the available length, the dwelling must have an engineered solution. Alternately, if 100% of the length along any particular wall can be sheathed, then that wall line shall be considered acceptable and an engineered solution is not required.

⑧ RETROFIT SUMMARY

BRACING, ANCHORS, CONNECTORS, AND TIE-DOWNS

1. Minimum required length of Wood Structural Panels per wall line: (check boxes where condition applies)
   North Wall _____ft x2 ☐ with tie-downs ☐ with Special Provisions
   East Wall _____ft x2 ☐ with tie-downs ☐ with Special Provisions
   South Wall _____ft x2 ☐ with tie-downs ☐ with Special Provisions
   West Wall _____ft x2 ☐ with tie-downs ☐ with Special Provisions
2. Panel Edge Nailing _____" on center.
3. New Foundation Sill Anchorage: — Additional types/quantity (if used):
   North Wall Type: _____ Min required:_____ — Type: _____ Min required:_____
   East Wall Type: _____ Min required:_____ — Type: _____ Min required:_____
   South Wall Type: _____ Min required:_____ — Type: _____ Min required:_____
   West Wall Type: _____ Min required:_____ — Type: _____ Min required:_____
4. Floor Framing Connectors (to Cripple Wall or Foundation Sill): — Additional types/quantity (if used):
   North Wall Type: _____ Min required:_____ — Type: _____ Min required:_____
   East Wall Type: _____ Min required:_____ — Type: _____ Min required:_____
   South Wall Type: _____ Min required:_____ — Type: _____ Min required:_____
   West Wall Type: _____ Min required:_____ — Type: _____ Min required:_____
5. ☐ Check this box if tie-downs and SUPPLEMENTAL TECHNICAL NOTES on Sheet S2 will be used.

APPLICANT: _____

PROPERTY ADDRESS: _____

Earthquake Retrofit Schedule
Two-Story
S_{DS} = 1.5

Retrofit of Crawlspace Dwellings (Plan Set)
Vulnerability-Based Seismic Assessment and Retrofit of
One- and Two-Family Dwellings
FEMA P-1100, Volume 2 - Plan Sets
Issued: SEPT 2019

FEMA

Date:

Sheet:

S3.1

APPLICANT: _____

PROPERTY ADDRESS: _____

Foundation and Retrofit Layout Plan

Retrofit of Crawlspace Dwellings (Plan Set)
Vulnerability-Based Seismic Assessment and Retrofit of
One- and Two-Family Dwellings
FEMA P-1100, Volume 2 - Plan Sets
Issued: SEPT 2019

FEMA

Notes:
1. See Retrofit Summary on Sheet S3.1 for minimum retrofitting requirements.

ONE SQUARE = _____ FEET

Revision:	Date:

Date:

Sheet:

S4

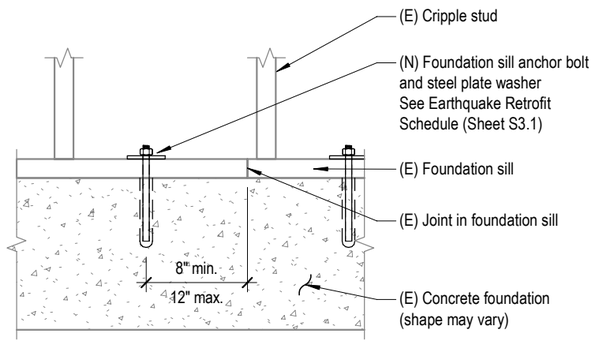

ELEVATION

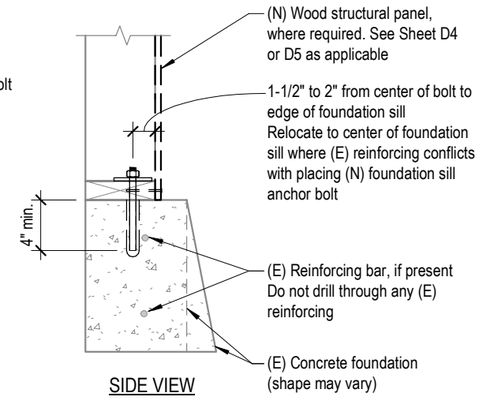

SIDE VIEW

1 ANCHOR THROUGH FOUNDATION SILL ONLY

Detail applies where (E) foundation sill is the same width as the (E) cripple studs

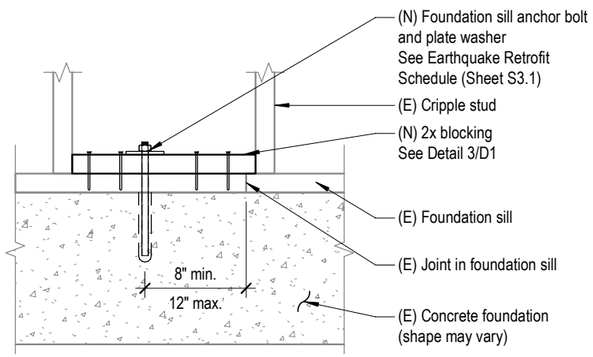

ELEVATION

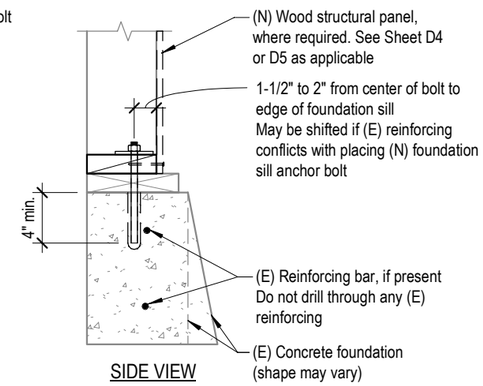

SIDE VIEW

2 ANCHOR THROUGH BLOCKING AND FOUNDATION SILL

Detail applies where (E) foundation sill is wider than the (E) cripple studs

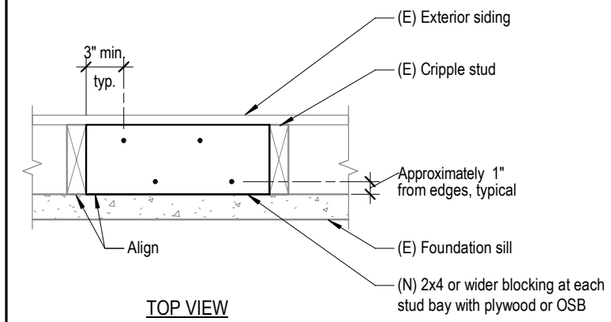

TOP VIEW

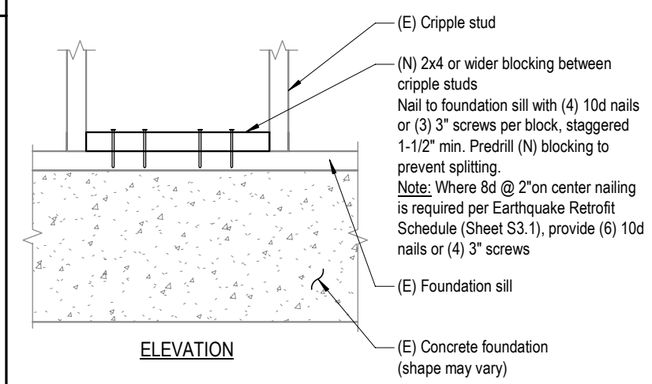

ELEVATION

3 NEW BLOCKING INSTALLATION FOR SHEATHING ATTACHMENT

At each stud bay with sheathing

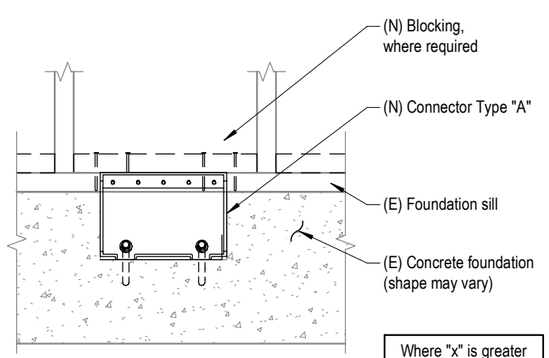

ELEVATION

Where "x" is greater than 2-1/2", use Connector Type "C".

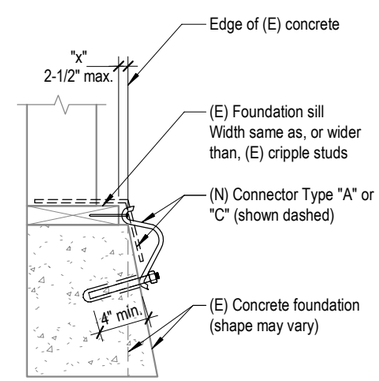

SIDE VIEW
Where no wood structural panel is required

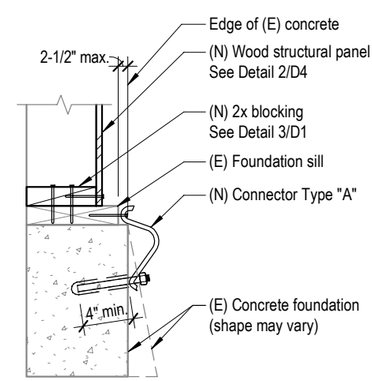

SIDE VIEW
At (N) wood structural panel where (E) foundation sill is wider than (E) cripple studs

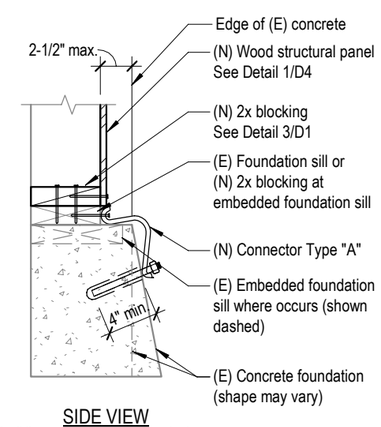

SIDE VIEW
At (N) wood structural panel where (E) foundation sill is same width as (E) cripple studs

4 FOUNDATION SILL CONNECTORS

Detail used where cripple wall studs are too short to allow drilling for new anchor bolts. Maximum cripple wall height 2'-0".

MATERIAL KEY:

Below is a key to common call-outs in the details. Unless specified otherwise in the details, use the sizes and materials as follows:

Term	Description
Nails	
8d (8 penny) at connectors attached over plywood	0.131" x 2-1/2" long
8d (8 penny) at connectors attached directly to framing	0.131" x 1-1/2" long
10d (10 penny) at connectors attached over plywood	0.148" x 3" long
10d (10 penny) at connectors attached directly to framing	0.148" x 1-1/2" long
16d (16 penny)	0.162" x 3-1/2" long
20d (20 penny)	0.192" x 4" long
Structural wood screws	Simpson Strong-Tie 1/4" SDS, GRK 3/8" RSS "Climatek", USP Mitek 1/4" WS "Gold Coat", or equivalent.
3" screw	3" long structural wood screw
4" screw	4" long structural wood screw
6" screw	6" long structural wood screw
Wood structural panel	15/32" Plywood sheathing. Exposure rating of Exterior or Exposure I. 4- or 5-Ply. or Oriented Strand Board (OSB) Conforming to US Voluntary Product Standard PS 2. Exposure rating of Exterior or Exposure I. Manufactured with exterior glue. Minimum 4-ply.
LVL (laminated veneer lumber)	Weyerhauser "Microllam", Boise-Cascade "VersaLam", Georgia-Pacific "GP-Lam", LP "Solid Start", or equivalent.
Plate washer	3" x 3" square x 0.229" thick.
"Peel & Stick" flashing tape bituthene	Fortiflash, Orange Peel-n-Seal, Typar, Tyvek, Vycor, HardieWrap, or equivalent.
For Connector types see Sheet S3.	

ABBREVIATIONS

(E)	Existing
(N)	New
min.	Minimum
max.	Maximum
NTS	Not to Scale
typ.	Typical

APPLICANT: _____

PROPERTY ADDRESS: _____

Foundation Sill to Concrete Foundation Connection Details

Retrofit of Crawlspace Dwellings (Plan Set)
Vulnerability-Based Seismic Assessment and Retrofit of One- and Two-Family Dwellings
FEMA P-1100, Volume 2 - Plan Sets
Issued: SEPT 2019

Date:

Sheet:

D1

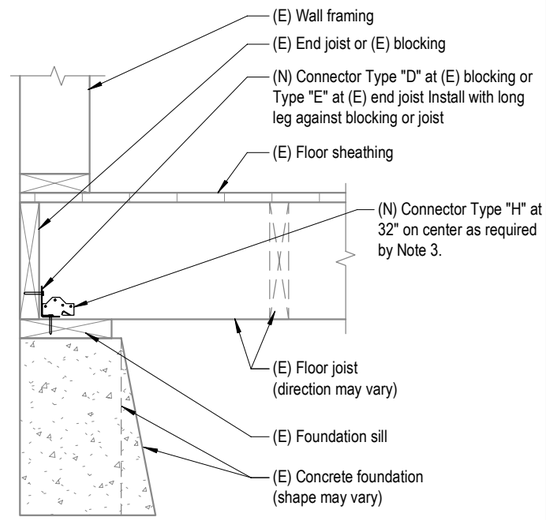

Notes:
1. See Sheet D1 for foundation sill to concrete foundation details.
2. Where (E) joists are parallel to the (E) foundation, install (N) 2x blocking at 4'-0" on center in the first joist space perpendicular to the (E) floor joists.
3. Required where floor framing is suppored directly on the foundation sill and there are cripple walls elsewhere that are greater than 4'-0" high.

1 FLOOR FRAMING-TO-FOUNDATION SILL CONNECTION

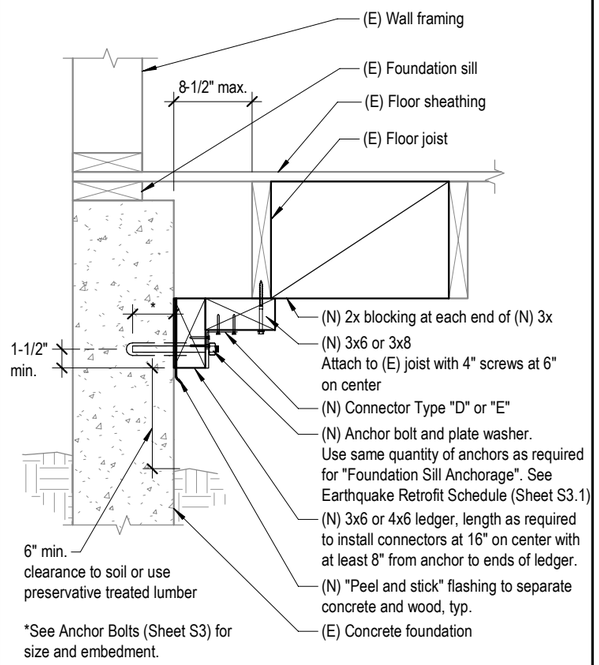

*See Anchor Bolts (Sheet S3) for size and embedment.

2 FLOOR FRAMING-TO-FOUNDATION SILL CONNECTION

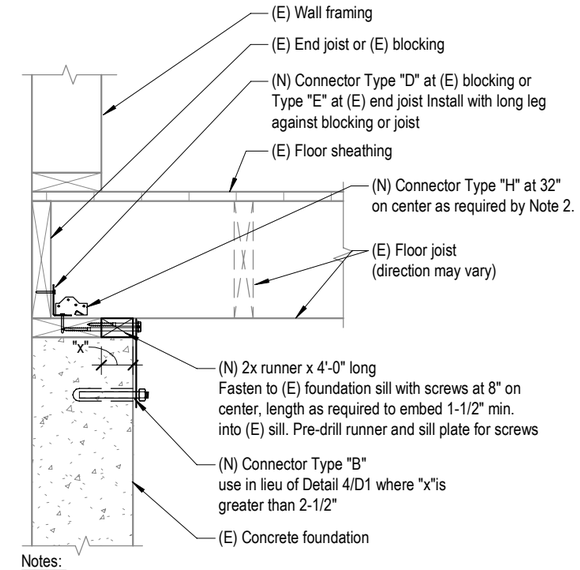

Notes:
1. Where (E) joists are parallel to the (E) foundation, install (N) 2x blocking at 4'-0" on center in the first joist space, perpendicular to the (E) floor joists
2. Required where floor framing is supported directly on the foundation sill and there are cripple walls elsewhere that are greater than 4'-0" high.

3 FLOOR FRAMING-TO-FOUNDATION SILL CONNECTION

MATERIAL KEY:

Below is a key to common call-outs in the details. Unless specified otherwise in the details, use the sizes and materials as follows:

Term	Description
Nails	
8d (8 penny) at connectors attached over plywood	0.131" x 2-1/2" long
8d (8 penny) at connectors attached directly to framing	0.131" x 1-1/2" long
10d (10 penny) at connectors attached over plywood	0.148" x 3" long
10d (10 penny) at connectors attached directly to framing	0.148" x 1-1/2" long
16d (16 penny)	0.162" x 3-1/2" long
20d (20 penny)	0.192" x 4" long
Structural wood screws	Simpson Strong-Tie 1/4" SDS, GRK 3/8" RSS "Climatek", USP Mitek 1/4" WS "Gold Coat", or equivalent.
3" screw	3" long structural wood screw
4" screw	4" long structural wood screw
6" screw	6" long structural wood screw
Wood structural panel	15/32" Plywood sheathing. Exposure rating of Exterior or Exposure I. 4- or 5-Ply. or Oriented Strand Board (OSB) Conforming to US Voluntary Product Standard PS 2. Exposure rating of Exterior or Exposure I. Manufactured with exterior glue. Minimum 4-ply.
LVL (laminated veneer lumber)	Weyerhauser "Microllam", Boise-Cascade "VersaLam", Georgia-Pacific "GP-Lam", LP "Solid Start", or equivalent.
Plate washer	3" x 3" square x 0.229" thick.
"Peel & Stick" flashing tape bituthene	Fortiflash, Orange Peel-n-Seal, Typar, Tyvek, Vycor, HardieWrap, or equivalent.
For Connector types see Sheet S3.	

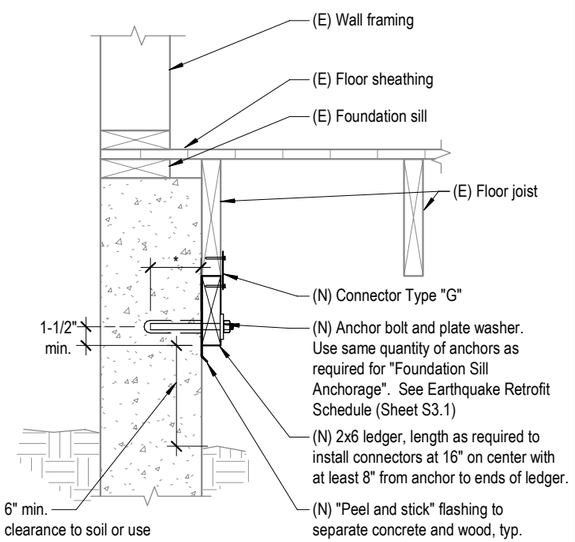

*See Anchor Bolts (Sheet S3) for size and embedment.

4 FLOOR FRAMING-TO-NEW LEDGER CONNECTION

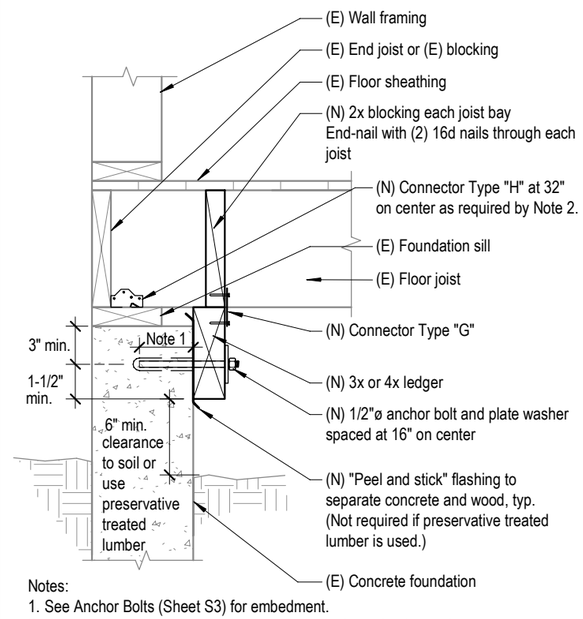

Notes:
1. See Anchor Bolts (Sheet S3) for embedment.
2. Required where floor framing is supported directly on the foundation sill and there are cripple walls elsewhere that are greater than 4'-0" high.

5 FLOOR FRAMING-TO-NEW LEDGER CONNECTION

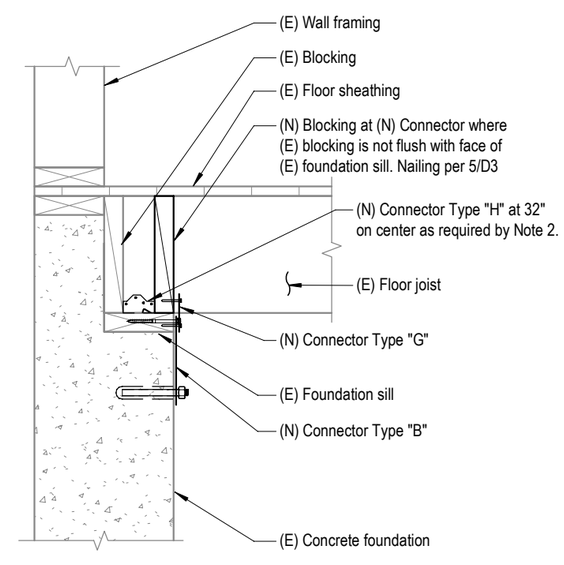

Notes:
1. Offset connectors "G" and "B".
2. Required where floor framing is supported directly on the foundation sill and there are cripple walls elsewhere that are greater than 4'-0" high.

6 FLOOR FRAMING-TO-FOUNDATION SILL CONNECTION

ABBREVIATIONS

(E)	Existing
(N)	New
min.	Minimum
max.	Maximum
NTS	Not to Scale
typ.	Typical

APPLICANT: _____

PROPERTY ADDRESS: _____

Floor Framing to Foundation Sill Connection Details

Retrofit of Crawlspace Dwellings (Plan Set)
Vulnerability-Based Seismic Assessment and Retrofit of One- and Two-Family Dwellings
FEMA P-1100, Volume 2 - Plan Sets
Issued: SEPT 2019

Date:

Sheet: **D2**

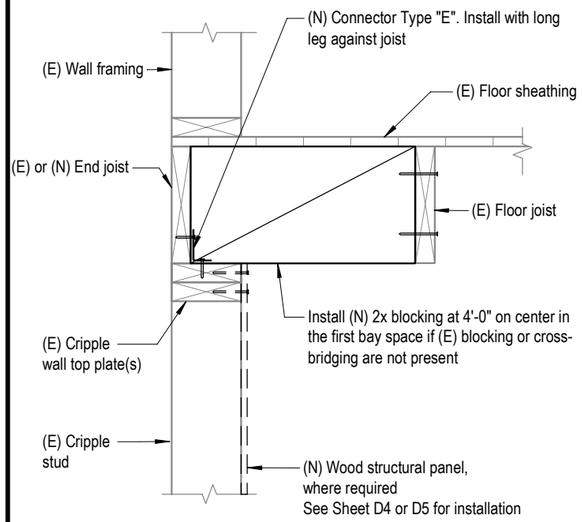

1 FLOOR-TO-CRIPPLE WALL CONNECTION
AT PARALLEL JOISTS

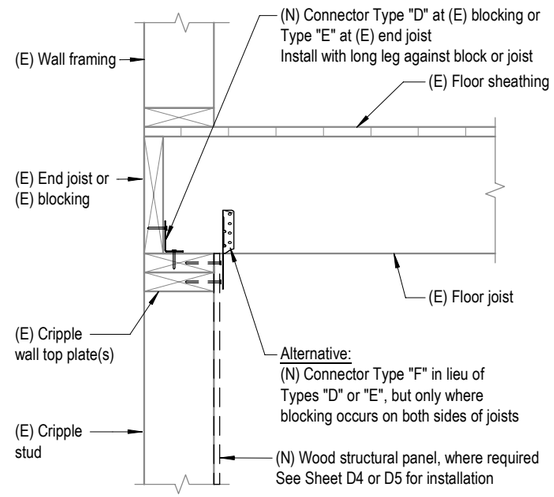

2 FLOOR-TO-CRIPPLE WALL CONNECTION
AT PERPENDICULAR JOISTS

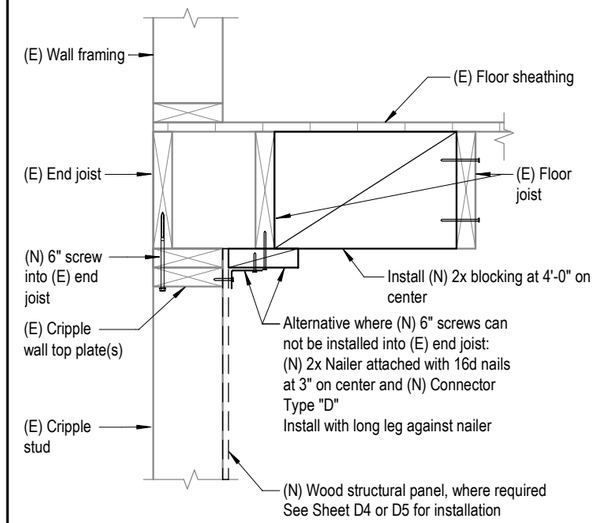

3 FLOOR-TO-CRIPPLE WALL CONNECTION
WHERE END JOIST IS NOT ACCESSIBLE

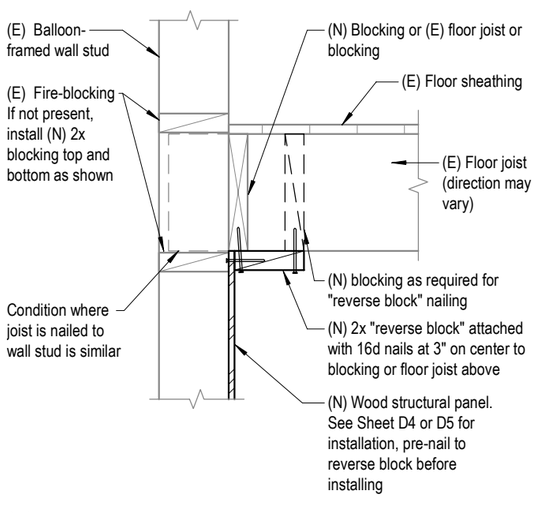

Note:
(N) blocking shall be installed snug tight with (3) 8d toe nails each end into perpendicular members.

4 FLOOR-TO-CRIPPLE WALL CONNECTION
AT BALLOON-FRAMED WALLS

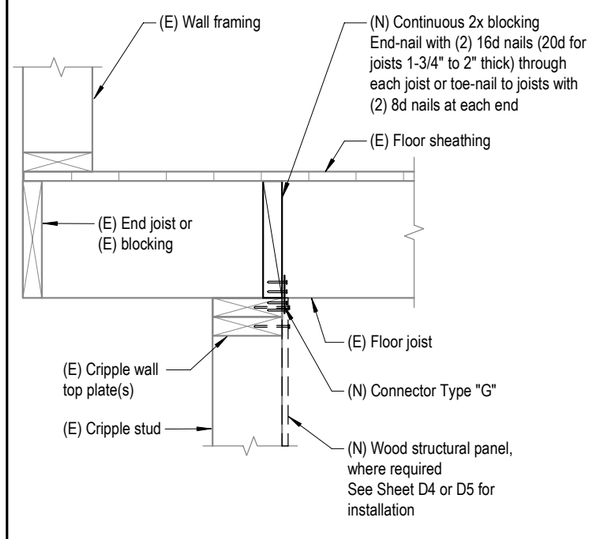

Note:
Use detail where no joist blocks exist above cripple wall top plate

5 FLOOR-TO-CRIPPLE WALL CONNECTION
AT FLOOR OVERHANG

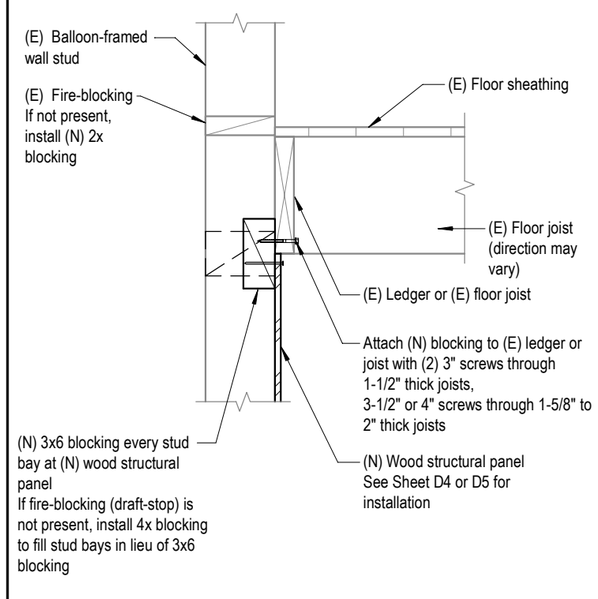

6 FLOOR-TO-CRIPPLE WALL CONNECTION

MATERIAL KEY:

Below is a key to common call-outs in the details. Unless specified otherwise in the details, use the sizes and materials as follows:

Term	Description
Nails	
8d (8 penny) at connectors attached over plywood	0.131" x 2-1/2" long
8d (8 penny) at connectors attached directly to framing	0.131" x 1-1/2" long
10d (10 penny) at connectors attached over plywood	0.148" x 3" long
10d (10 penny) at connectors attached directly to framing	0.148" x 1-1/2" long
16d (16 penny)	0.162" x 3-1/2" long
20d (20 penny)	0.192" x 4" long
Structural wood screws	Simpson Strong-Tie 1/4" SDS, GRK 3/8" RSS "Climatek", USP Mitek 1/4" WS "Gold Coat", or equivalent.
3" screw	3" long structural wood screw
4" screw	4" long structural wood screw
6" screw	6" long structural wood screw
Wood structural panel	15/32" Plywood sheathing. Exposure rating of Exterior or Exposure I. 4- or 5-Ply. or Oriented Strand Board (OSB) Conforming to US Voluntary Product Standard PS 2. Exposure rating of Exterior or Exposure I. Manufactured with exterior glue. Minimum 4-ply.
LVL (laminated veneer lumber)	Weyerhauser "Microllam", Boise-Cascade "VersaLam", Georgia-Pacific "GP-Lam", LP "Solid Start", or equivalent.
Plate washer	3" x 3" square x 0.229" thick.
"Peel & Stick" flashing tape bituthene	Fortiflash, Orange Peel-n-Seal, Typar, Tyvek, Vycor, HardieWrap, or equivalent.
For Connector types see Sheet S3.	

ABBREVIATIONS

(E)	Existing
(N)	New
min.	Minimum
max.	Maximum
NTS	Not to Scale
typ.	Typical

APPLICANT: _____

PROPERTY ADDRESS: _____

Floor Framing to Cripple Wall Connection Details

Retrofit of Crawlspace Dwellings (Plan Set)
Vulnerability-Based Seismic Assessment and Retrofit of
One- and Two-Family Dwellings
FEMA P-1100, Volume 2 - Plan Sets
Issued: SEPT 2019

FEMA

Date:

Sheet:

D3

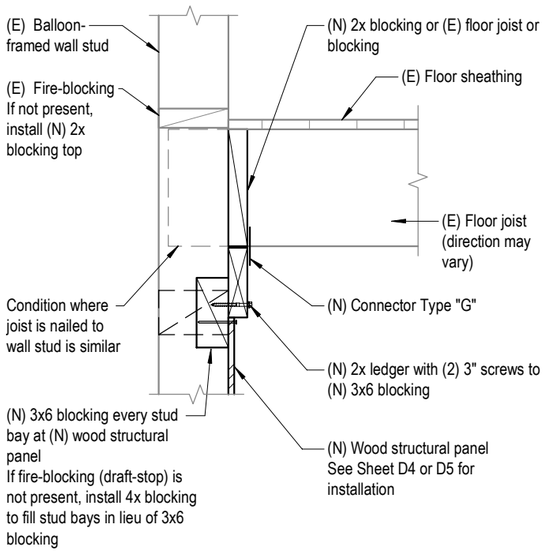

1 FLOOR-TO-BALLOON FRAMED WALLS

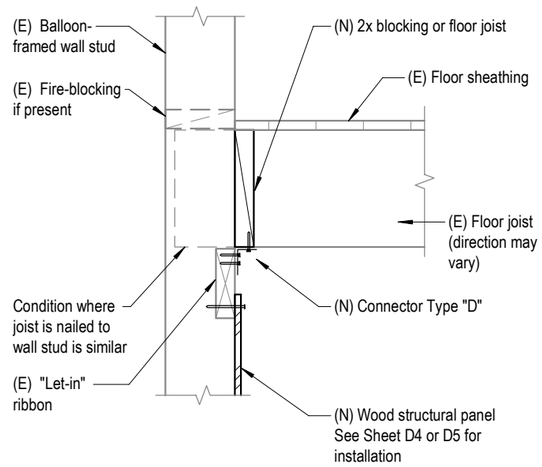

2 FLOOR-TO-BALLOON FRAMED WALLS

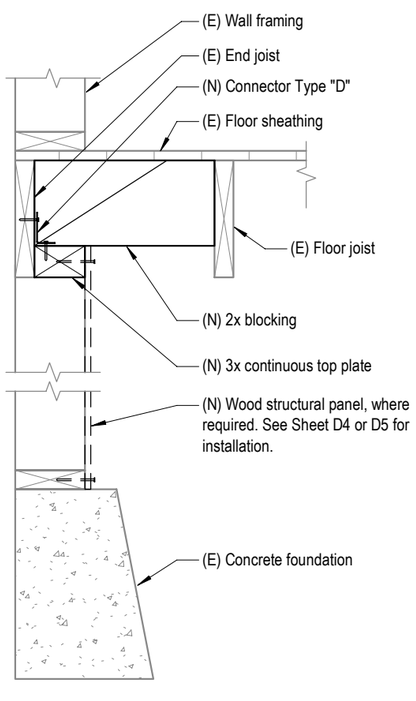

4 CRIPPLE WALL WITHOUT TOP PLATE

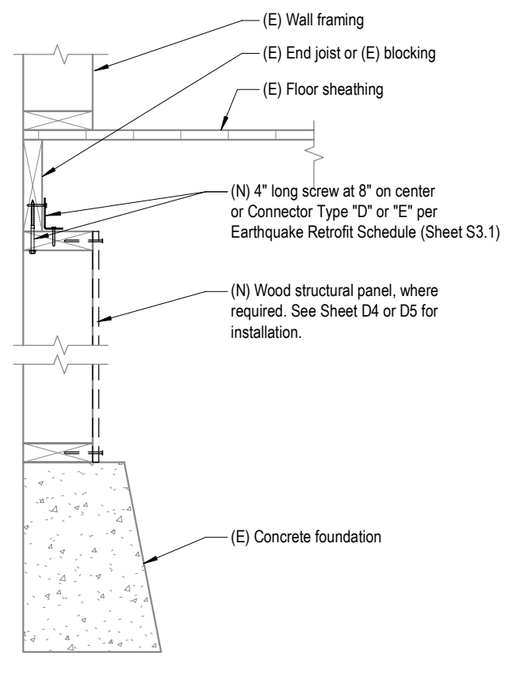

5 CRIPPLE WALL WITH SINGLE TOP PLATE

MATERIAL KEY:

Below is a key to common call-outs in the details. Unless specified otherwise in the details, use the sizes and materials as follows:

Term	Description
Nails	
8d (8 penny) at connectors attached over plywood	0.131" x 2-1/2" long
8d (8 penny) at connectors attached directly to framing	0.131" x 1-1/2" long
10d (10 penny) at connectors attached over plywood	0.148" x 3" long
10d (10 penny) at connectors attached directly to framing	0.148" x 1-1/2" long
16d (16 penny)	0.162" x 3-1/2" long
20d (20 penny)	0.192" x 4" long
Structural wood screws	Simpson Strong-Tie 1/4" SDS, GRK 3/8" RSS "Climatek", USP Mitek 1/4" WS "Gold Coat", or equivalent.
3" screw	3" long structural wood screw
4" screw	4" long structural wood screw
6" screw	6" long structural wood screw
Wood structural panel	15/32" Plywood sheathing. Exposure rating of Exterior or Exposure I. 4- or 5-Ply. or Oriented Strand Board (OSB) Conforming to US Voluntary Product Standard PS 2. Exposure rating of Exterior or Exposure I. Manufactured with exterior glue. Minimum 4-ply.
LVL (laminated veneer lumber)	Weyerhauser "Microllam", Boise-Cascade "VersaLam", Georgia-Pacific "GP-Lam", LP "Solid Start", or equivalent.
Plate washer	3" x 3" square x 0.229" thick.
"Peel & Stick" flashing tape bituthene	Fortiflash, Orange Peel-n-Seal, Typar, Tyvek, Vycor, HardieWrap, or equivalent.

ABBREVIATIONS

(E)	Existing
(N)	New
min.	Minimum
max.	Maximum
NTS	Not to Scale
typ.	Typical

APPLICANT: _____

PROPERTY ADDRESS: _____

Floor Framing to Cripple Wall Connection Details

Retrofit of Crawlspace Dwellings (Plan Set)
Vulnerability-Based Seismic Assessment and Retrofit of
One- and Two-Family Dwellings
FEMA P-1100, Volume 2 - Plan Sets
Issued: SEPT 2019

Date:

Sheet:

D3.1

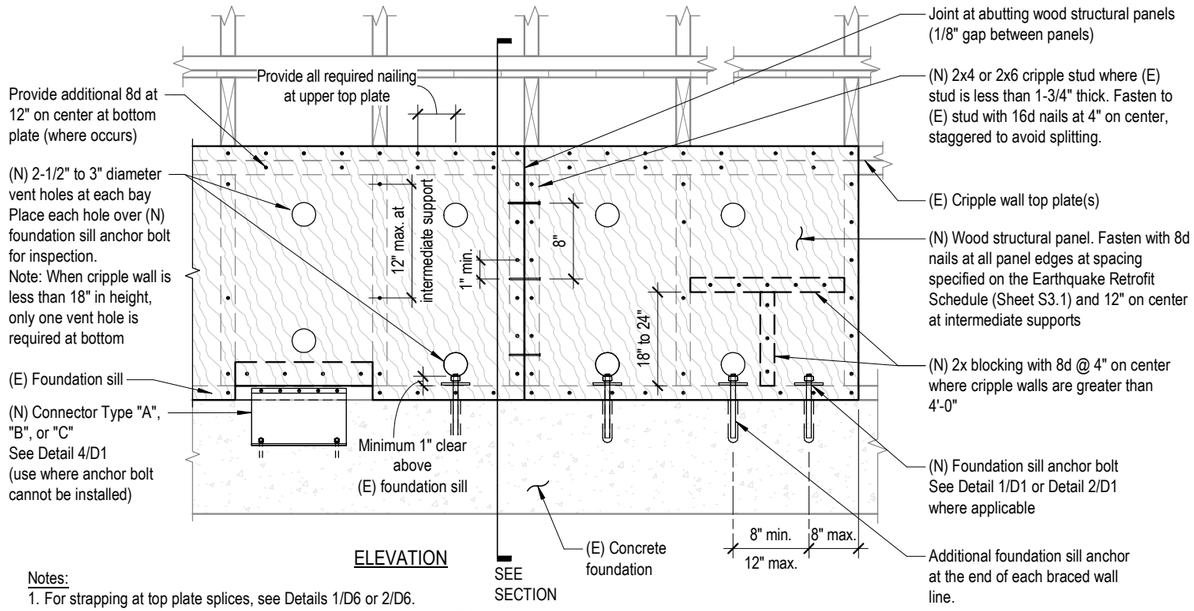

ELEVATION

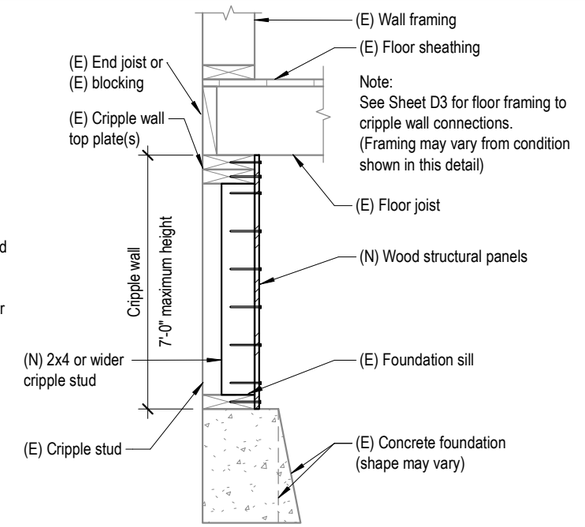

SECTION

Note:
If (E) foundation sill is embedded in (E) footing, provide (N) blocking as shown in Detail 2/D4

Notes:
1. For strapping at top plate splices, see Details 1/D6 or 2/D6.
2. At crawlspace vents or similar cripple-wall blockouts, see Detail 3/D6.
3. Prior to installing wood structural panels, see Detail 4/D6 where pipes or conduits pass through cripple studs or top plates.
4. Wood structural panels may be installed vertically (face grain parallel to stud) or horizontally.
5. Provide 2x4 flat blocking at all horizontal panel edges.

1 FOUNDATION SILL SAME WIDTH AS CRIPPLE WALL

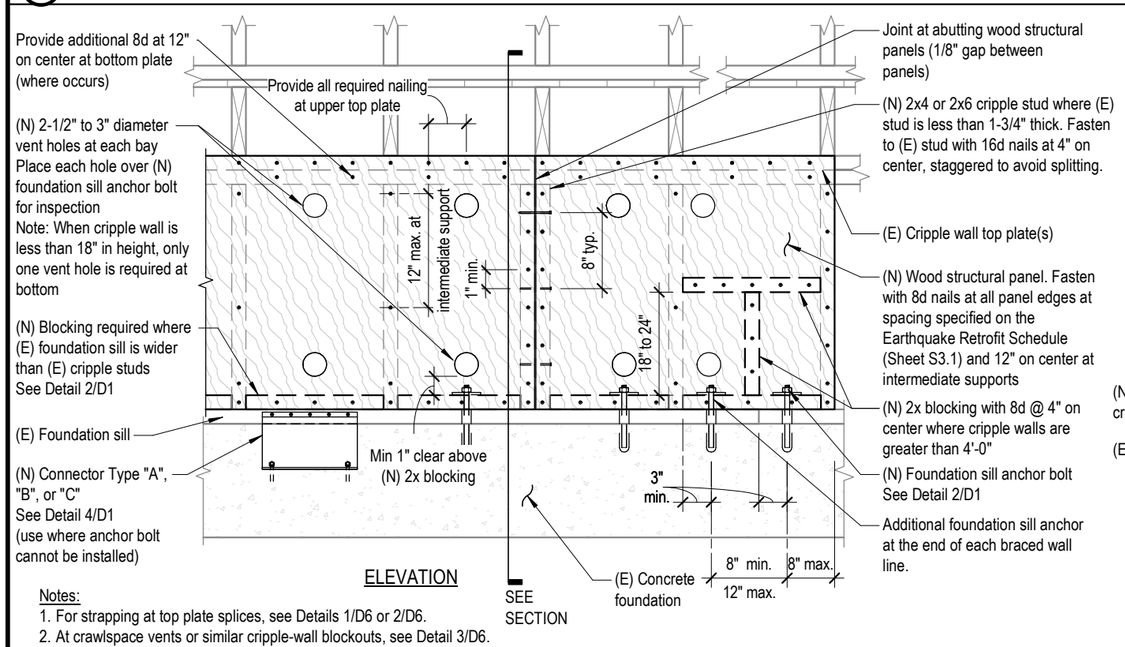

ELEVATION

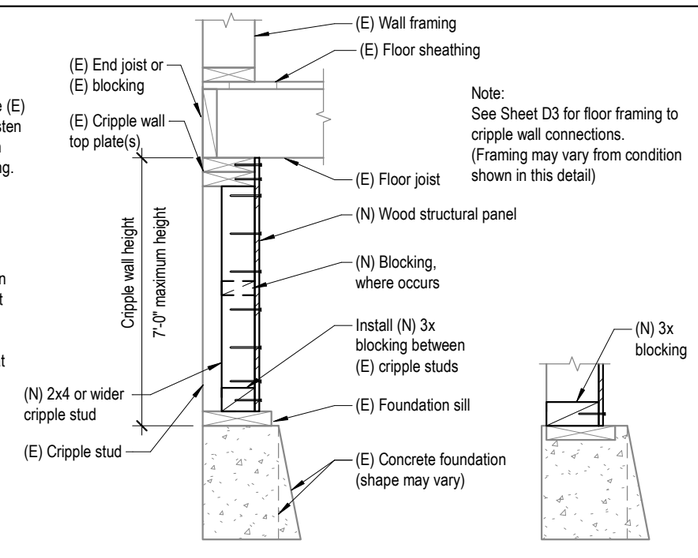

SECTION

SECTION
Condition where (E) foundation sill is embedded in concrete

Notes:
1. For strapping at top plate splices, see Details 1/D6 or 2/D6.
2. At crawlspace vents or similar cripple-wall blockouts, see Detail 3/D6.
3. Prior to installing wood structural panels, see Detail 4/D6 where pipes or conduits pass through cripple studs or top plates.
4. Wood structural panels may be installed vertically (face grain parallel to stud) or horizontally.
5. Provide 2x4 flat blocking at all horizontal panel edges.

2 FOUNDATION SILL WIDER THAN CRIPPLE WALL

MATERIAL KEY:

Below is a key to common call-outs in the details. Unless specified otherwise in the details, use the sizes and materials as follows:

Term	Description
Nails	
8d (8 penny) at connectors attached over plywood	0.131" x 2-1/2" long
8d (8 penny) at connectors attached directly to framing	0.131" x 1-1/2" long
10d (10 penny) at connectors attached over plywood	0.148" x 3" long
10d (10 penny) at connectors attached directly to framing	0.148" x 1-1/2" long
16d (16 penny)	0.162" x 3-1/2" long
20d (20 penny)	0.192" x 4" long
Structural wood screws	Simpson Strong-Tie 1/4" SDS, GRK 3/8" RSS "Climatek", USP Mitek 1/4" WS "Gold Coat", or equivalent.
3" screw	3" long structural wood screw
4" screw	4" long structural wood screw
6" screw	6" long structural wood screw
Wood structural panel	15/32" Plywood sheathing. Exposure rating of Exterior or Exposure I. 4- or 5-Ply. or Oriented Strand Board (OSB) Conforming to US Voluntary Product Standard PS 2. Exposure rating of Exterior or Exposure I. Manufactured with exterior glue. Minimum 4-ply.
LVL (laminated veneer lumber)	Weyerhauser "Microllam", Boise-Cascade "VersaLam", Georgia-Pacific "GP-Lam", LP "Solid Start", or equivalent.
Plate washer	3" x 3" square x 0.229" thick.
"Peel & Stick" flashing tape bituthene	Fortiflash, Orange Peel-n-Seal, Typar, Tyvek, Vycor, HardieWrap, or equivalent.
For Connector types see Sheet S3.	

ABBREVIATIONS

(E)	Existing
(N)	New
min.	Minimum
max.	Maximum
NTS	Not to Scale
typ.	Typical

APPLICANT: _____

PROPERTY ADDRESS: _____

Wood Structural Panel Installation without Tie-Downs

Retrofit of Crawlspace Dwellings (Plan Set)
Vulnerability-Based Seismic Assessment and Retrofit of
One- and Two-Family Dwellings
FEMA P-1100, Volume 2 - Plan Sets
Issued: SEPT 2019

FEMA

Date:

Sheet:

D4

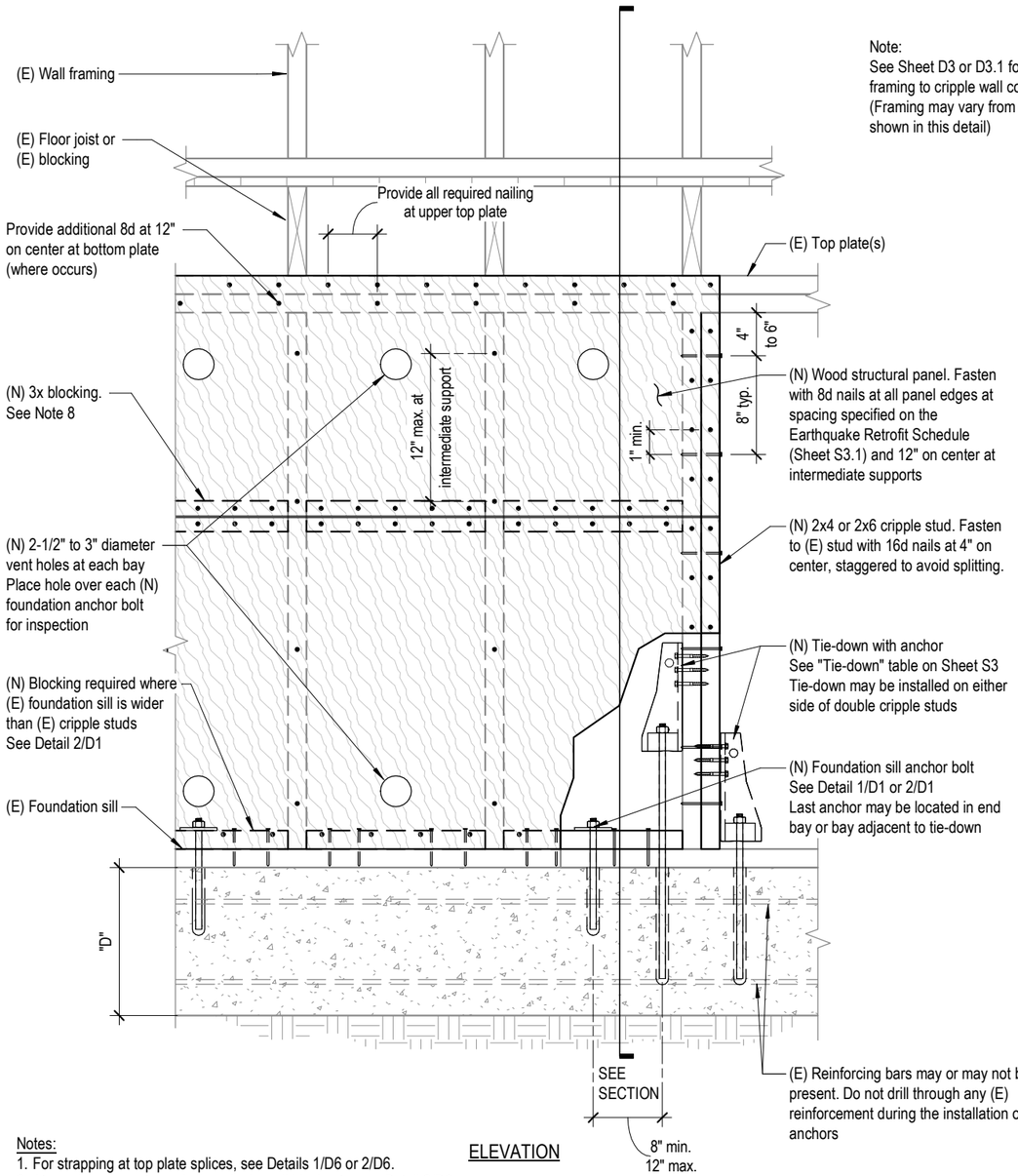

ELEVATION

Note:
See Sheet D3 or D3.1 for floor framing to cripple wall connections. (Framing may vary from condition shown in this detail)

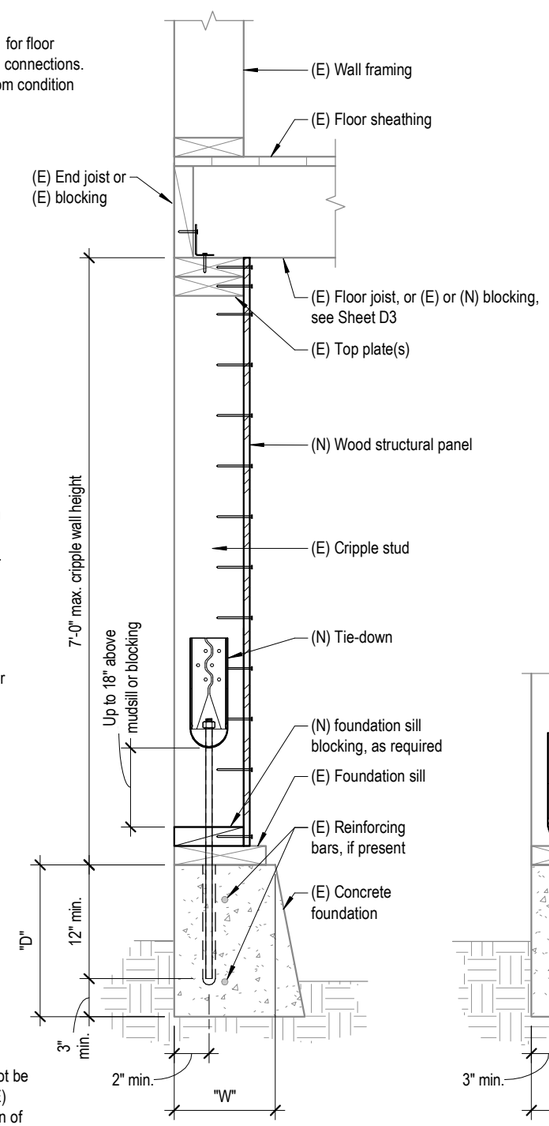

SECTION
(Foundation sill BLOCKING REQUIRED)

SECTION
(NO foundation sill BLOCKING REQUIRED)

Notes:
1. For strapping at top plate splices, see Details 1/D6 or 2/D6.
2. At crawlspace vents or similar cripple-wall blockouts, see Detail 3/D6.
3. Prior to installing wood structural panels, see Detail 4/D6 where pipes or conduits pass through cripple studs or top plates.
4. "W" indicates the width of an existing foundation, or new foundation constructed in accordance with Detail 1/D7.
5. "D" indicates the depth of an existing foundation, or new foundation constructed in accordance with Detail 1/D7.
6. For existing foundations, see Supplemental Technical Notes, Sheet S2, Section R for additional requirements.
7. Wood structural panels may be installed vertically (face grain parallel to stud) or horizontally.
8. Provide 2x4 flat blocking at all horizontal panel edges.

1 TYPICAL INSTALLATION

MATERIAL KEY:

Below is a key to common call-outs in the details. Unless specified otherwise in the details, use the sizes and materials as follows:

Term	Description
Nails	
8d (8 penny) at connectors attached over plywood	0.131" x 2-1/2" long
8d (8 penny) at connectors attached directly to framing	0.131" x 1-1/2" long
10d (10 penny) at connectors attached over plywood	0.148" x 3" long
10d (10 penny) at connectors attached directly to framing	0.148" x 1-1/2" long
16d (16 penny)	0.162" x 3-1/2" long
20d (20 penny)	0.192" x 4" long
Structural wood screws	Simpson Strong-Tie 1/4" SDS, GRK 3/8" RSS "Climatek", USP Mitek 1/4" WS "Gold Coat", or equivalent.
3" screw	3" long structural wood screw
4" screw	4" long structural wood screw
6" screw	6" long structural wood screw
Wood structural panel	15/32" Plywood sheathing. Exposure rating of Exterior or Exposure I. 4- or 5-Ply. or Oriented Strand Board (OSB) Conforming to US Voluntary Product Standard PS 2. Exposure rating of Exterior or Exposure I. Manufactured with exterior glue. Minimum 4-ply.
LVL (laminated veneer lumber)	Weyerhauser "Microllam", Boise-Cascade "VersaLam", Georgia-Pacific "GP-Lam", LP "Solid Start", or equivalent.
Plate washer	3" x 3" square x 0.229" thick.
"Peel & Stick" flashing tape bituthene	Fortiflash, Orange Peel-n-Seal, Typar, Tyvek, Vycor, HardieWrap, or equivalent.

For Connector types see Sheet S3.

ABBREVIATIONS

(E)	Existing
(N)	New
min.	Minimum
max.	Maximum
NTS	Not to Scale
typ.	Typical

APPLICANT: _____

PROPERTY ADDRESS: _____

Wood Structural Panel Installation with Tie-Downs

Retrofit of Crawlspace Dwellings (Plan Set)
Vulnerability-Based Seismic Assessment and Retrofit of
One- and Two-Family Dwellings
FEMA P-1100, Volume 2 - Plan Sets
Issued: SEPT 2019

Date:

Sheet:

D5

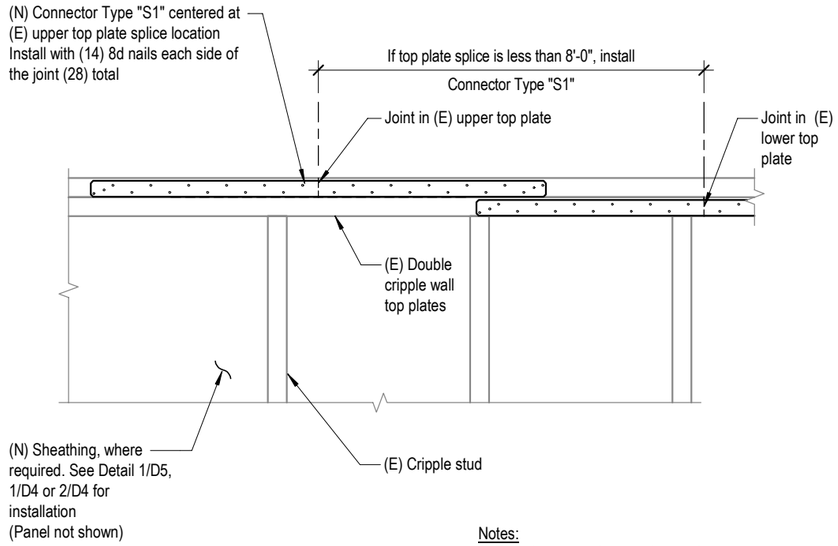

Notes:
1. Floor framing not shown for clarity.
2. In area of sheathing, install strap over sheathing.

1 TOP PLATE SPLICE AT EXISTING DOUBLE TOP PLATES

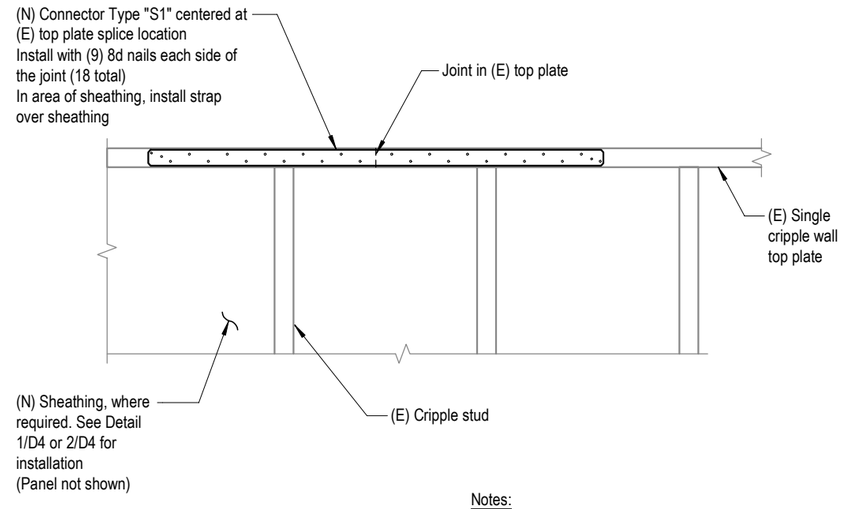

Notes:
1. Floor framing not shown for clarity.
2. In area of sheathing, install strap over sheathing.

2 TOP PLATE SPLICE AT EXISTING SINGLE TOP PLATE

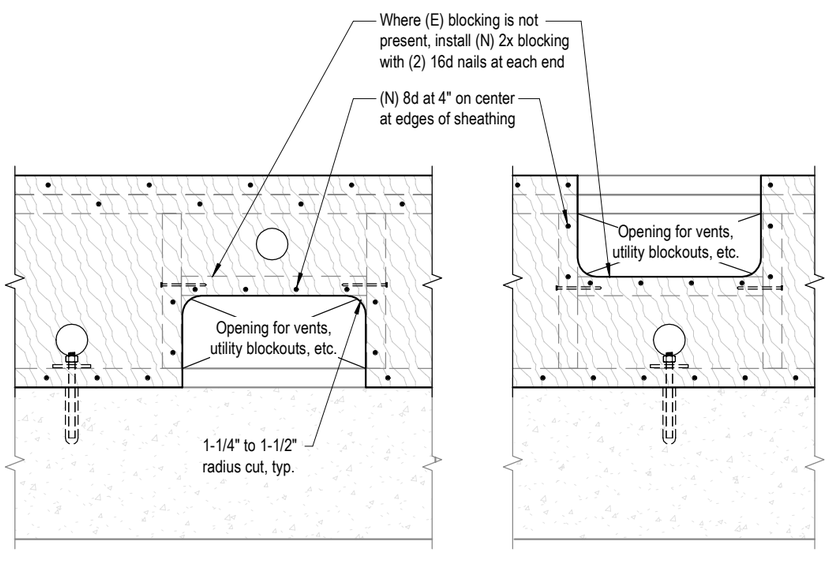

Notes:
1. Do not cover existing vents.
2. Increase wood structural panel length a distance equal to the length of blockout(s) or one stud bay width whichever is greater.

3 CUTOUT REQUIREMENTS IN BRACED PANELS

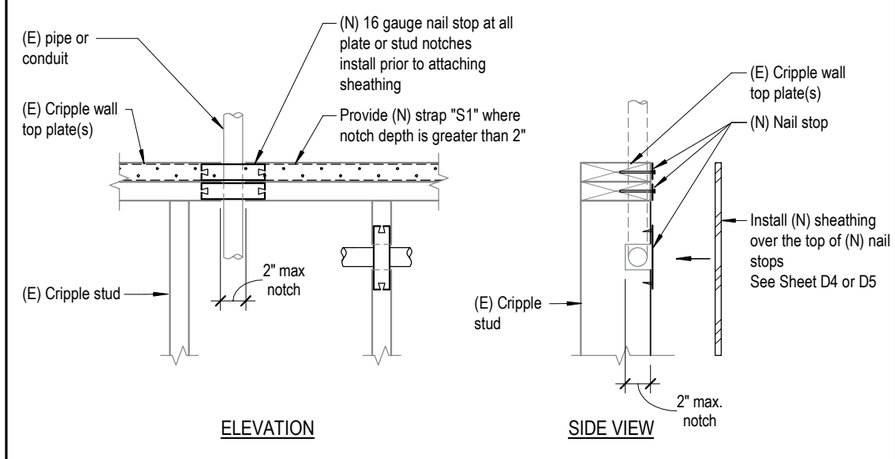

Note:
1. Floor framing not shown.

4 ALLOWABLE NOTCHING AND REINFORCING FOR TOP PLATES AND STUDS

MATERIAL KEY:

Below is a key to common call-outs in the details. Unless specified otherwise in the details, use the sizes and materials as follows:

Term	Description
Nails	
8d (8 penny) at connectors attached over plywood	0.131" x 2-1/2" long
8d (8 penny) at connectors attached directly to framing	0.131" x 1-1/2" long
10d (10 penny) at connectors attached over plywood	0.148" x 3" long
10d (10 penny) at connectors attached directly to framing	0.148" x 1-1/2" long
16d (16 penny)	0.162" x 3-1/2" long
20d (20 penny)	0.192" x 4" long
Structural wood screws	Simpson Strong-Tie 1/4" SDS, GRK 3/8" RSS "Climatek", USP Mitek 1/4" WS "Gold Coat", or equivalent.
3" screw	3" long structural wood screw
4" screw	4" long structural wood screw
6" screw	6" long structural wood screw
Wood structural panel	15/32" Plywood sheathing. Exposure rating of Exterior or Exposure I. 4- or 5-Ply. or Oriented Strand Board (OSB) Conforming to US Voluntary Product Standard PS 2. Exposure rating of Exterior or Exposure I. Manufactured with exterior glue. Minimum 4-ply.
LVL (laminated veneer lumber)	Weyerhauser "Microllam", Boise-Cascade "VersaLam", Georgia-Pacific "GP-Lam", LP "Solid Start", or equivalent.
Plate washer	3" x 3" square x 0.229" thick.
"Peel & Stick" flashing tape bituthene	Fortiflash, Orange Peel-n-Seal, Typar, Tyvek, Vycor, HardieWrap, or equivalent.
For Connector types see Sheet S3.	

ABBREVIATIONS

(E)	Existing
(N)	New
min.	Minimum
max.	Maximum
NTS	Not to Scale
typ.	Typical

APPLICANT: _____

PROPERTY ADDRESS: _____

Vent Openings and Top Plate Details

Retrofit of Crawlspace Dwellings (Plan Set)
Vulnerability-Based Seismic Assessment and Retrofit of
One- and Two-Family Dwellings
FEMA P-1100, Volume 2 - Plan Sets
Issued: SEPT 2019

Date:

Sheet:

D6

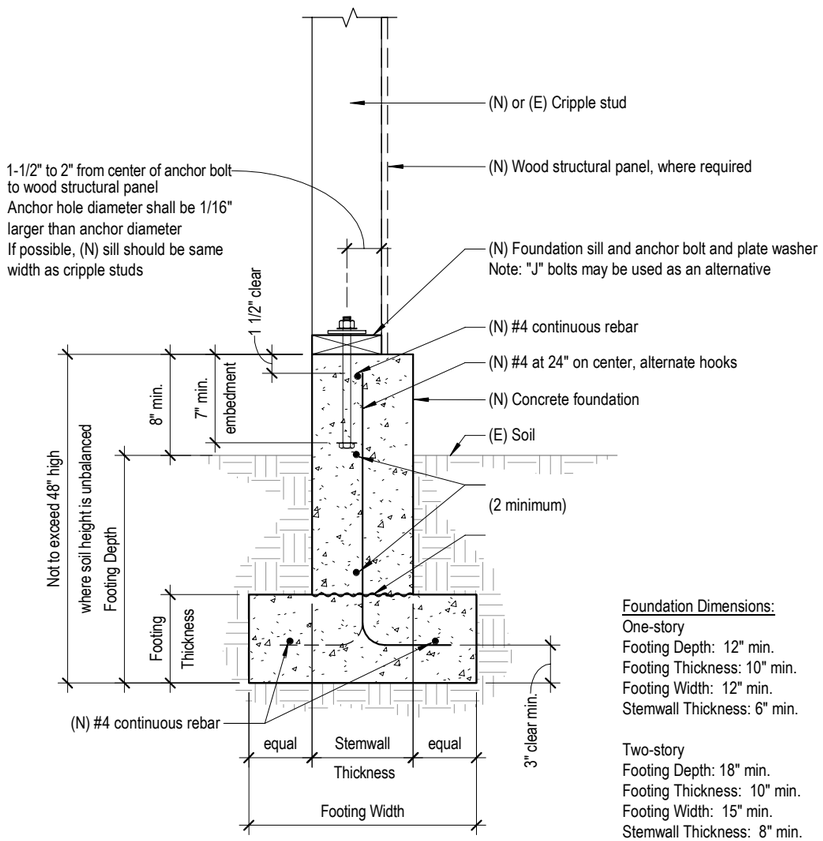

Foundation Dimensions:
One-story
Footing Depth: 12" min.
Footing Thickness: 10" min.
Footing Width: 12" min.
Stemwall Thickness: 6" min.

Two-story
Footing Depth: 18" min.
Footing Thickness: 10" min.
Footing Width: 15" min.
Stemwall Thickness: 8" min.

SECTION

Notes:
1.
2.
3.
4.
5. footing.
6. -6"
7. otential

1 **CONCRETE FOUNDATION FOR SECTION REPLACEMENT - OPTION 1**

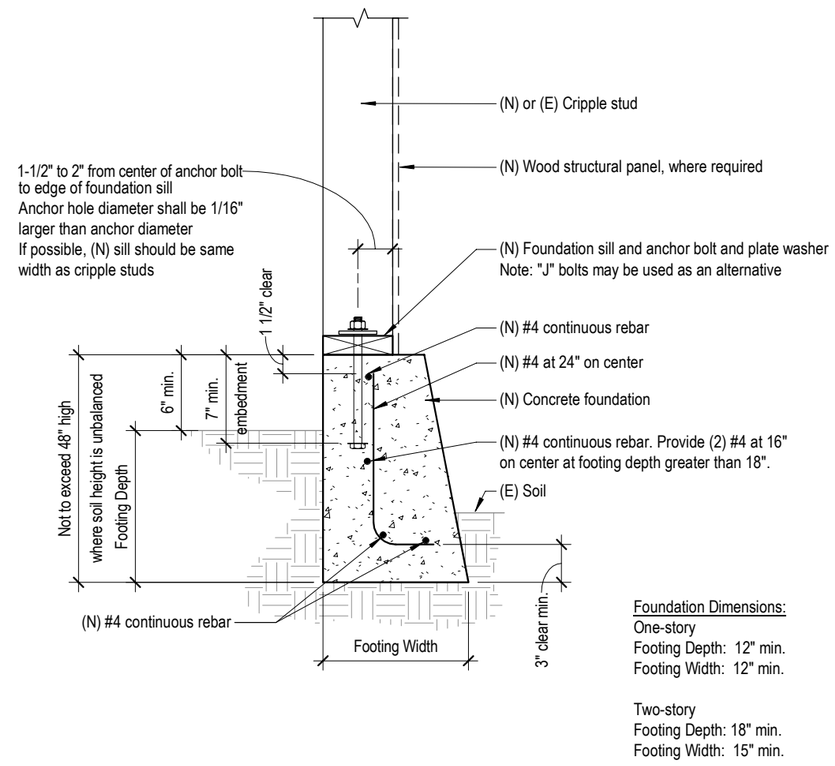

Foundation Dimensions:
One-story
Footing Depth: 12" min.
Footing Width: 12" min.

Two-story
Footing Depth: 18" min.
Footing Width: 15" min.

SECTION

Notes:
1. Contact Building Official to verify applicability.
2. Where frost conditions occur, the minimum depth shall extend below the frost line.
3. Footing to be deepened as required to bear on firm soils.
4. When expansive soil is known to exist, the foundation depth and reinforcement shall be as approved by the Building Official.
5. Where (N) foundations are placed adjacent to (E) foundations, connect (N) and (E) foundations with (3) #4 x 3'-6" dowels. Embed dowels 8" minimum into the (E) foundation with adhesive. See General Notes, Section M.
6. A geotechnical report or modified foundation may be required at locations with expansive or liquefiable soils or sites with potential for sliding.

2 **CONCRETE FOUNDATION FOR SECTION REPLACEMENT - OPTION 2**

MATERIAL KEY:

Below is a key to common call-outs in the details. Unless specified otherwise in the details, use the sizes and materials as follows:

Term	Description
Nails	
8d (8 penny) at connectors attached over plywood	0.131" x 2-1/2" long
8d (8 penny) at connectors attached directly to framing	0.131" x 1-1/2" long
10d (10 penny) at connectors attached over plywood	0.148" x 3" long
10d (10 penny) at connectors attached directly to framing	0.148" x 1-1/2" long
16d (16 penny)	0.162" x 3-1/2" long
20d (20 penny)	0.192" x 4" long
Structural wood screws	Simpson Strong-Tie 1/4" SDS, GRK 3/8" RSS "Climatek", USP Mitek 1/4" WS "Gold Coat", or equivalent.
3" screw	3" long structural wood screw
4" screw	4" long structural wood screw
6" screw	6" long structural wood screw
Wood structural panel	15/32" Plywood sheathing. Exposure rating of Exterior or Exposure I. 4- or 5-Ply. or Oriented Strand Board (OSB) Conforming to US Voluntary Product Standard PS 2. Exposure rating of Exterior or Exposure I. Manufactured with exterior glue. Minimum 4-ply.
LVL (laminated veneer lumber)	Weyerhauser "Microllam", Boise-Cascade "VersaLam", Georgia-Pacific "GP-Lam", LP "Solid Start", or equivalent.
Plate washer	3" x 3" square x 0.229" thick.
"Peel & Stick" flashing tape bituthene	Fortiflash, Orange Peel-n-Seal, Typar, Tyvek, Vycor, HardieWrap, or equivalent.

ABBREVIATIONS

(E)	Existing
(N)	New
min.	Minimum
max.	Maximum
NTS	Not to Scale
typ.	Typical

APPLICANT: _____

PROPERTY ADDRESS: _____

Foundation Replacement Details

Retrofit of Crawlspace Dwellings (Plan Set)
Vulnerability-Based Seismic Assessment and Retrofit of One- and Two-Family Dwellings
FEMA P-1100, Volume 2 - Plan Sets
Issued: SEPT 2019

Date:

Sheet:

D7

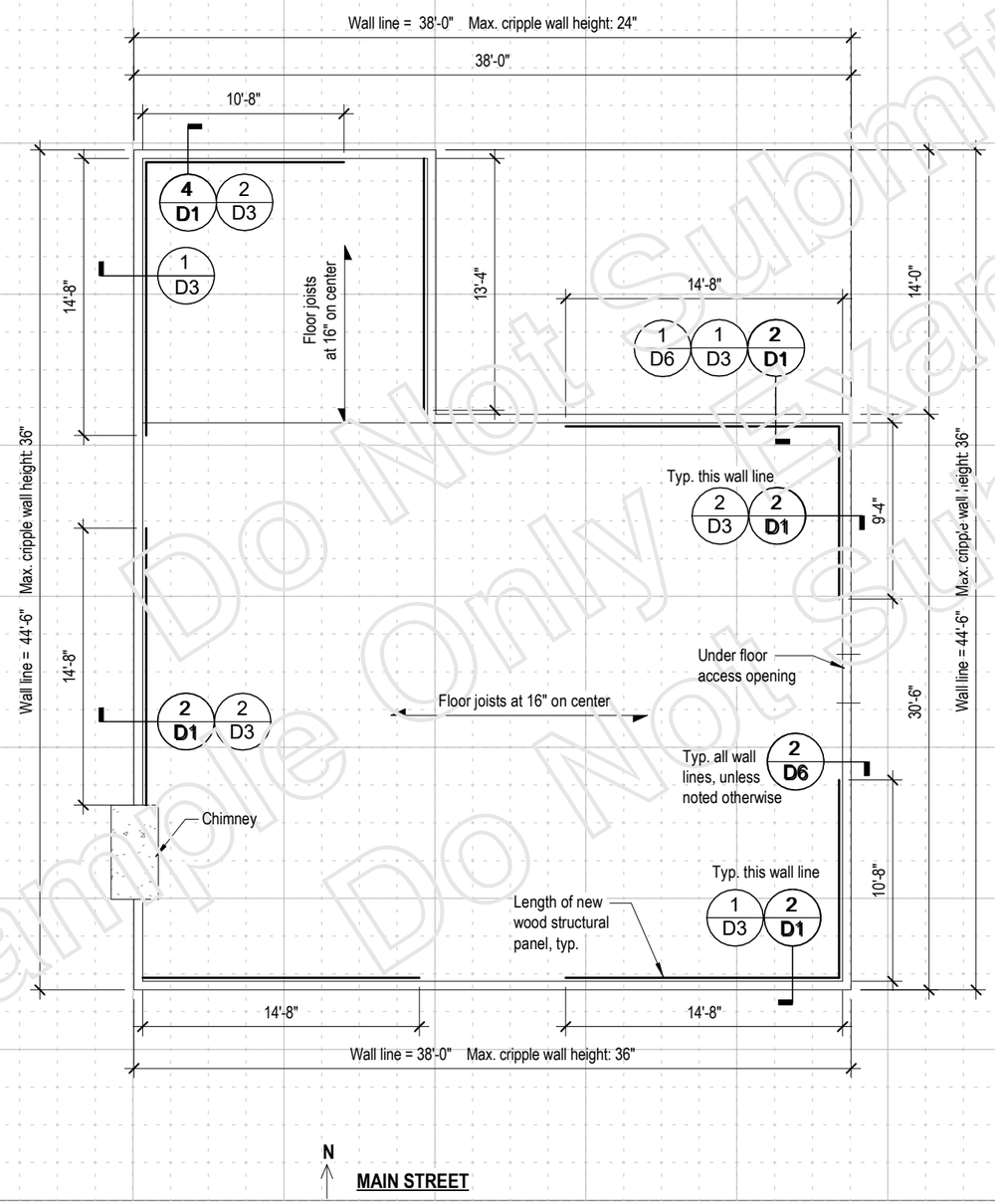

Example Do Not Submit
Do Not Submit Only Example Only

APPLICANT: Doe Residence

PROPERTY ADDRESS: 123 Main Street, Anytown, USA

Example of Foundation and Strengthening Layout Plan

Retrofit of Crawlspace Dwellings (Plan Set)
Vulnerability-Based Seismic Assessment and Retrofit of
One- and Two-Family Dwellings
FEMA P-1100, Volume 2 - Plan Sets
Issued: SEPT 2019

FEMA

X1

ONE SQUARE = 2 FEET

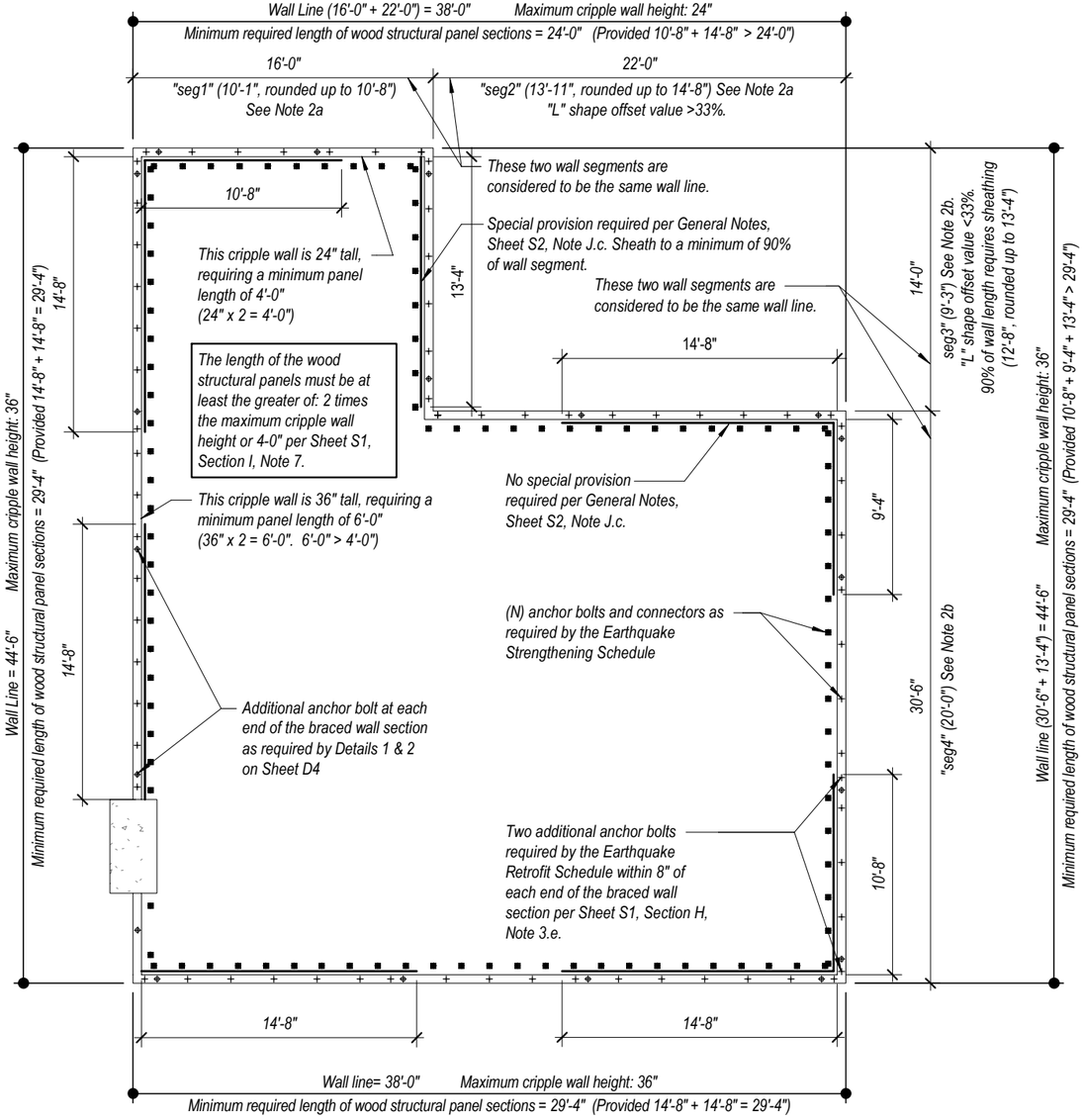

EXAMPLE OF CALCULATING TOTAL STRENGTHENING REQUIREMENTS

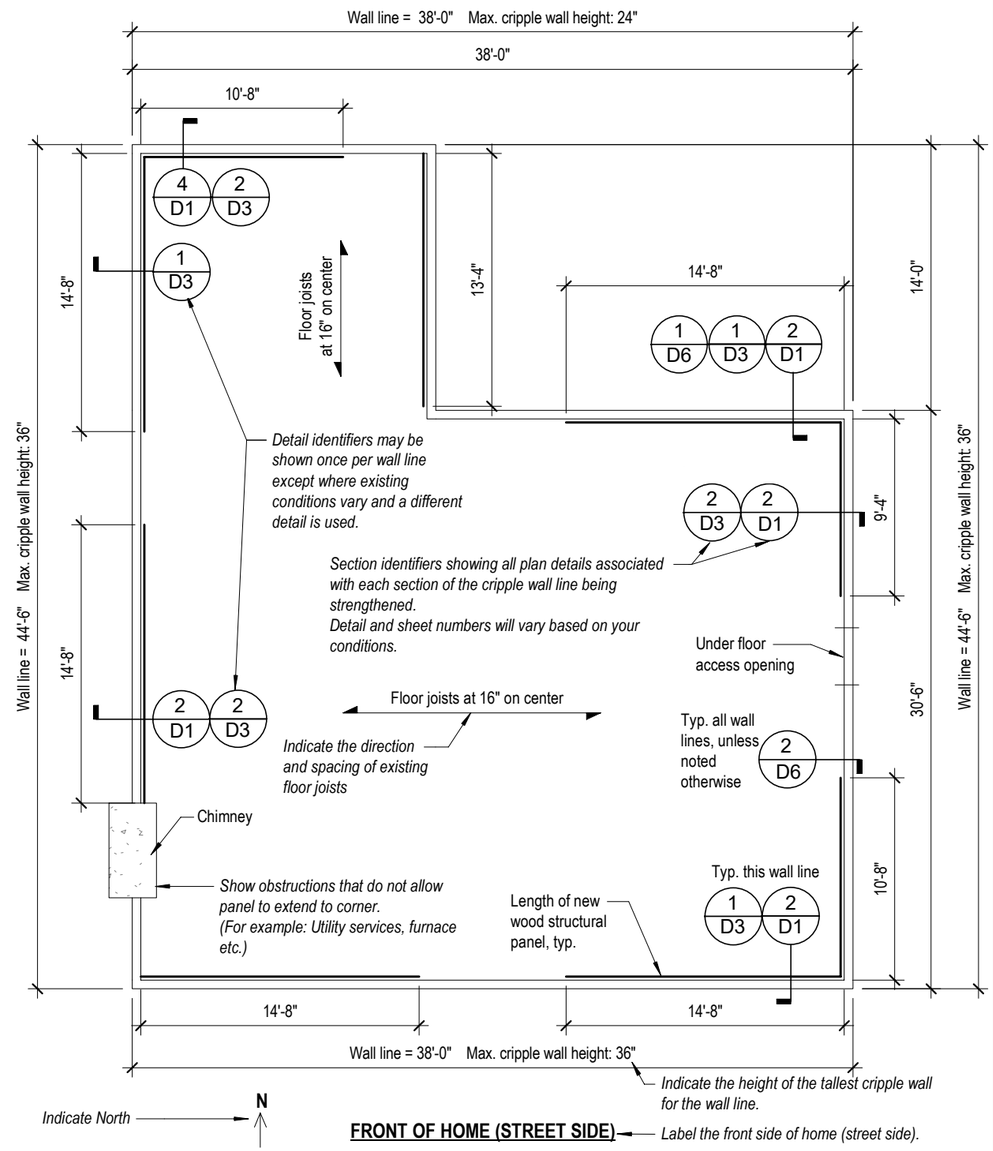

EXAMPLE OF NOTATION FOR SUBMITTAL TO BUILDING OFFICIAL

This example is a 1383 square foot, 1-story home with a "Light" weight classification in a very high seismic area.
Using the S_{DS} 1.5/One-Story Earthquake Strengthing Schedule from Sheet S3.1, the 1201-1500 Total Area row shows that the length of strengthening required is 29'-4" (14.7x2) at the three 36" high cripple wall lines and 24'-0" (12x2) at the 24" high cripple wall line. The wall lines of this home allow enough length to use wood structural panels without tie-downs.
This example uses 1/2"ø Anchor Bolts (17 required per wall line), and Type "E" Connectors (25 required per wall line).

Notes:

1. Plans show a typical building foundation. Instructional notes are in *italics* and should not be included on submittal drawing. See Sheet X1 for an example of a final plan. Refer to Sheet 01 for additional instructions.
2. Sample calculations for offset walls as shown above (See Section J of the General Notes on Sheet S1):
   - 2a. Approximate length of strengthening required for segments "seg1" and "seg2" at the north wall line:
     $$\text{seg1} = 24'\text{-}0''\left(\frac{16'}{16'+22'}\right) \approx 10'\text{-}1'' \qquad \text{seg2} = 24'\text{-}0''\left(\frac{22'}{16'+22'}\right) \approx 13'\text{-}11''$$
   - 2b. Length of strengthening required for segments "seg3" and "seg4" at the east wall line:
     $$\text{seg3} = 29'\text{-}4''\left(\frac{14'}{30'\text{-}6''+14'}\right) \approx 9'\text{-}3'' \qquad \text{seg4} = 29'\text{-}4''\left(\frac{30'\text{-}6''}{30'\text{-}6''+14'}\right) \approx 20'\text{-}1''$$
3. Required length values are rounded up to be at 16" typical stud space increments.

Key:

- Minimum required length of strengthening using wood structural panels, anchors, and connectors
- + Foundation sill anchor or connector
- ◆ Additional foundation sill anchor or connector
- ■ Floor connector
- Detail Number / Sheet Number (Homeowner or Contractor to choose most appropriate detail)

Definitions:

(E)	Existing
(N)	New
Strengthening:	Foundation and/or cripple wall work intended to improve performance during an earthquake.
Wall line:	All wall segments forming the overall building dimension on one side.

This sheet is for instruction and reference only.

Do not submit to the Building Official.

Example - Foundation Plan (Dwelling without tie-downs)

Retrofit of Crawlspace Dwellings (Plan Set)
Vulnerability-Based Seismic Assessment and Retrofit of One- and Two-Family Dwellings
FEMA P-1100, Volume 2 - Plan Sets
Issued: SEPT 2019

FEMA

X2

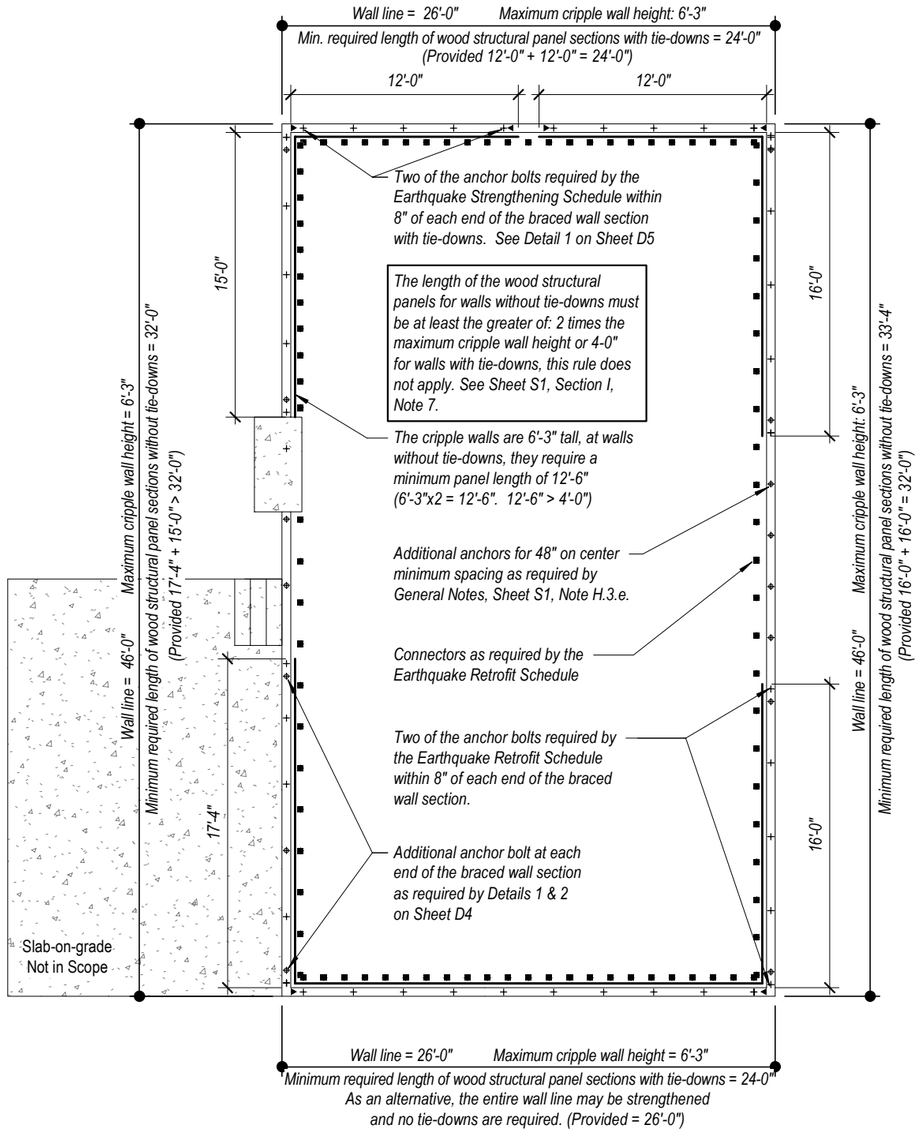

EXAMPLE OF CALCULATING TOTAL STRENGTHENING REQUIREMENTS

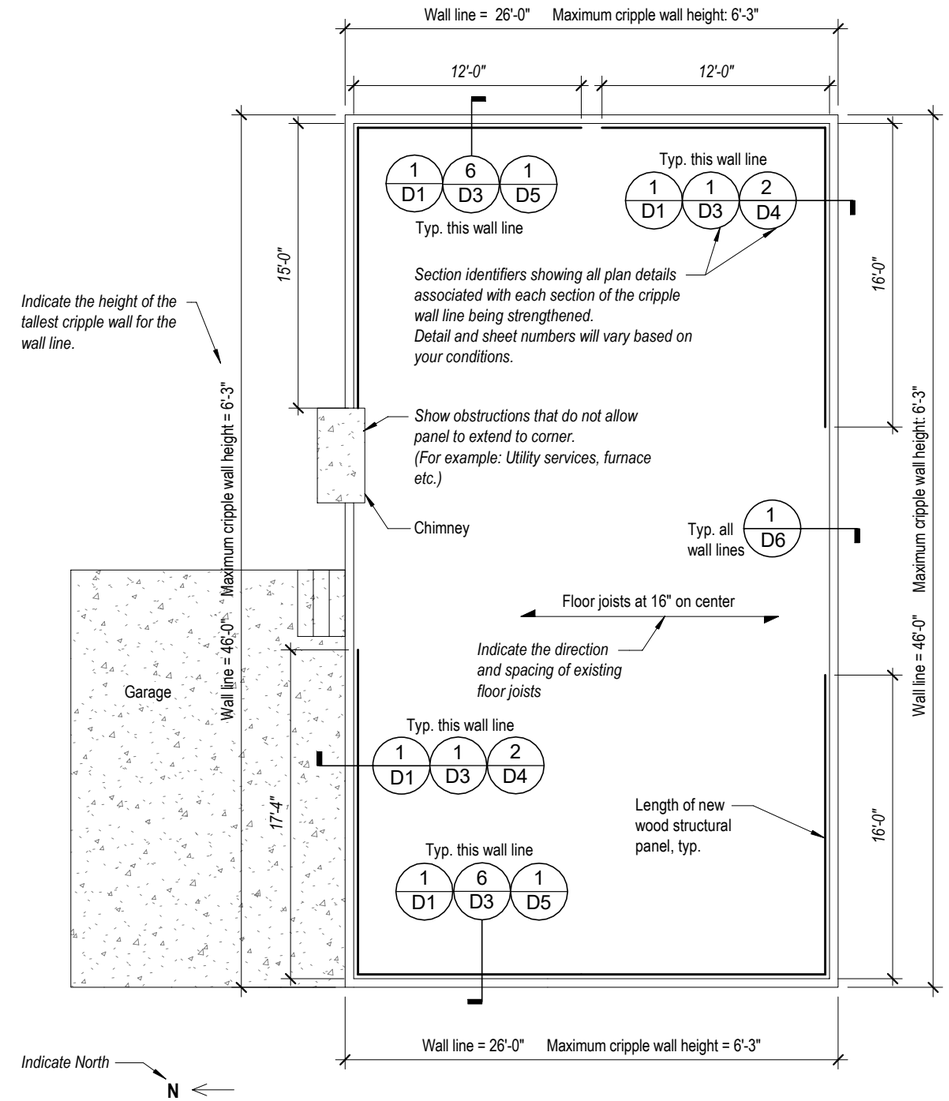

EXAMPLE OF NOTATION FOR SUBMITTAL TO Building Official

This example is a 2398 square foot two-story home (excluding garage and porch), with a "Light" weight classification in a low seismic area.
Using the SDS 1.0/Two-story Earthquake Strengthening Schedule from Sheet S3.1, the 2001-2400 Total Area row shows that the length of strengthening required is 32'-0" (16x2) for the uniform cripple wall height of 6'-3". The side walls allow enough length to use wood structural panels without tie-downs. The front and back walls do not provide enough length and will require tie-downs, this will reduce the required length to 24'-0" (12x2). This example uses 5/8"ø Anchor Bolts (10 required per wall line) and Type "D" Connectors (23 required per wall line).

Notes:

1. Plan shows typical notation. Instructional notes are in *italics* and should not be included on submittal drawing. Refer to Sheet 01 for additional instructions.
2. Required length values are rounded up to be at 16" typical stud space increments.

Key:

- Minimum required length of strengthening using wood structural panels, anchors, and connectors
- + Foundation sill anchor bolt or connector
- ◆ Additional foundation sill anchor or connector
- ▸ Tie-down
- ■ Floor framing connector
- Detail Number / Sheet Number (Homeowner or Contractor to choose most appropriate detail)

Definitions:

(E)	Existing
(N)	New
Strengthening:	Foundation and/or cripple wall work intended to improve performance during an earthquake.
Wall line:	All wall segments forming the overall building dimension on one side.

This sheet is for instruction and reference only.

Do not submit to the Building Official.

Example - Foundation Plan (Dwelling with tie-downs)

Retrofit of Crawlspace Dwellings (Plan Set)
Vulnerability-Based Seismic Assessment and Retrofit of
One- and Two-Family Dwellings
FEMA P-1100, Volume 2 - Plan Sets
Issued: SEPT 2019

FEMA

X3

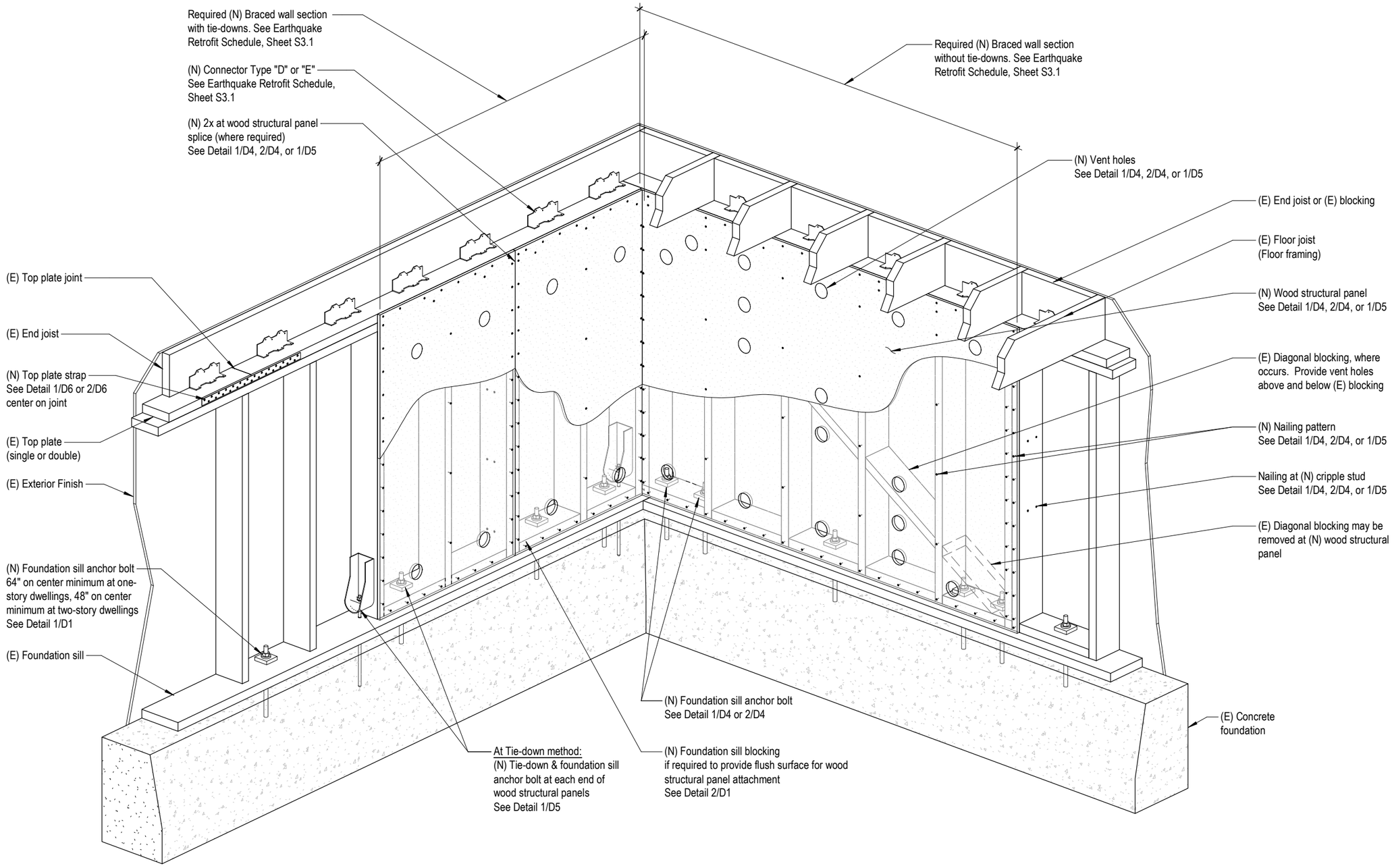

Notes:
1. This detail is to show an example of cripple wall that has gone through an earthquake retrofit and to identify terms and details used in this plan set.
2. This detail is not intended to supersede requirements contained in the specific installation details on Sheets D1 through D7.
3. This view is looking from the interior of the crawl space.

Definitions

(E)	Existing
(N)	New
Strengthening:	Foundation and/or cripple wall work intended to improve performance during an earthquake.
Wall line:	All wall segments forming the overall building dimension on one side.

This sheet is for instruction and reference only.

Do not submit to the Building Official.

Illustration - Cripple Wall Strengthening

Retrofit of Crawlspace Dwellings (Plan Set)
Vulnerability-Based Seismic Assessment and Retrofit of One- and Two-Family Dwellings
FEMA P-1100, Volume 2 - Plan Sets
Issued: SEPT 2019

FEMA

X4

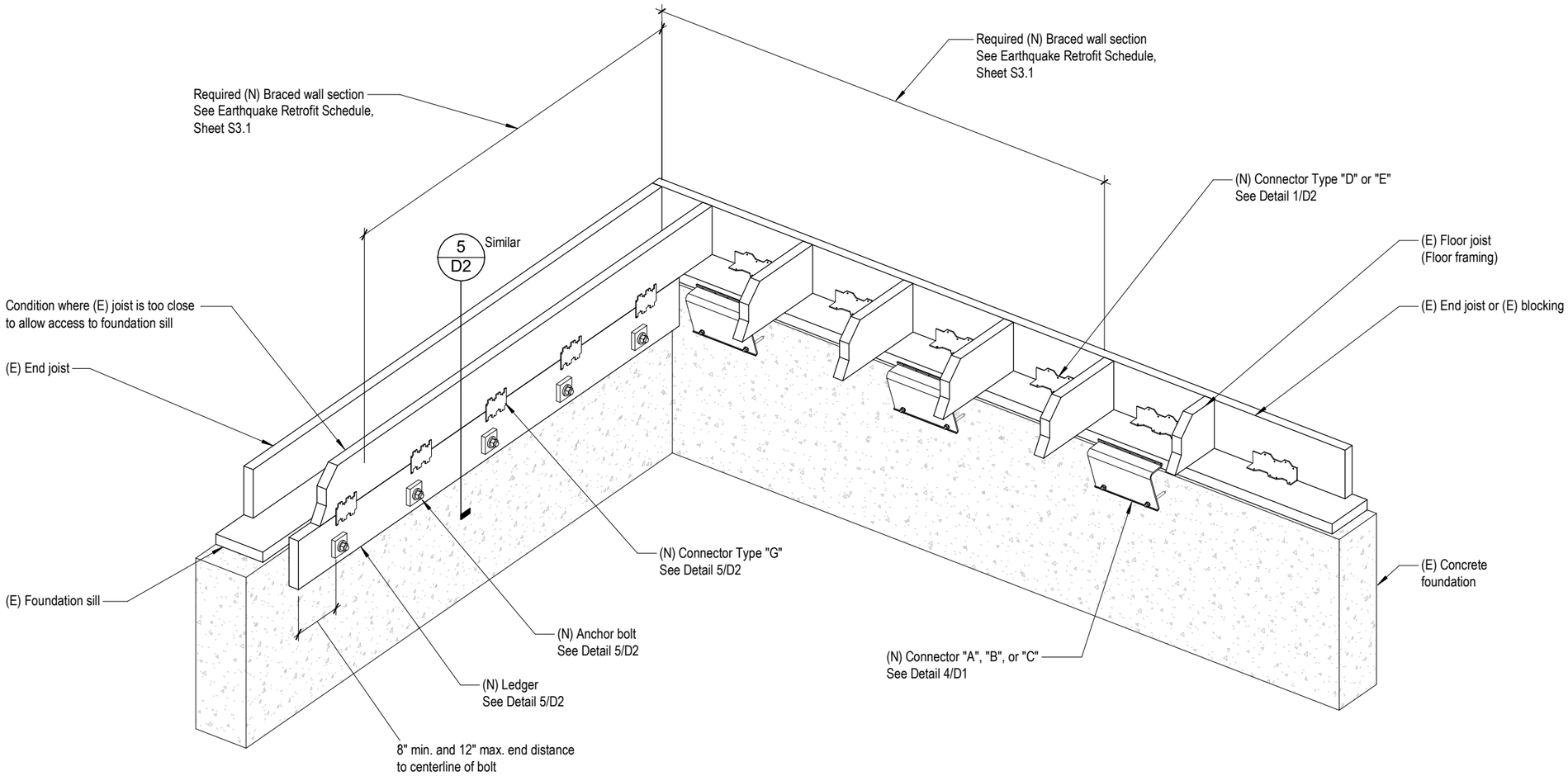

Notes:
1. This detail is to show an example of an earthquake retrofit where there is no cripple wall, and to identify terms and details used in this plan set.
2. This detail is not intended to supersede requirements contained in the specific installation details on Sheets D1 through D6.
3. This view is looking from the interior of the crawl space.

Definitions

(E)	Existing
(N)	New
Strengthening:	Foundation and/or cripple wall work intended to improve performance during an earthquake.
Wall line:	All wall segments forming the overall building dimension on one side.

This sheet is for instruction and reference only.

Do not submit to the Building Official.

Illustration - Strengthening - No Cripple Wall

Retrofit of Crawlspace Dwellings (Plan Set)
Vulnerability-Based Seismic Assessment and Retrofit of
One- and Two-Family Dwellings
FEMA P-1100, Volume 2 - Plan Sets
Issued: SEPT 2019

FEMA

X5

FEMA

FEMA P-1100-2A