ICC EVALUATION SERVICE®

www.icc-es.org | (800) 423-6587 | (562) 699-0543 *A Subsidiary of the International Code Council®*

ICC-ES Evaluation Report
ESR-2652

Reissued April 2022

Revised May 2022

This report is subject to renewal April 2023.

DIVISION: 06 00 00—WOOD, PLASTICS AND COMPOSITES
Section: 06 12 19—Shear Wall Panels

REPORT HOLDER:

SIMPSON STRONG-TIE COMPANY INC.

EVALUATION SUBJECT:

STRONG-WALL® HIGH STRENGTH WOOD SHEARWALL PANELS (WSWHs)

1.0 EVALUATION SCOPE

Compliance with the following codes:

- 2021, 2018, 2015, 2012 and 2009 *International Building Code®* (IBC)
- 2021, 2018, 2015, 2012 and 2009 *International Residential Code®* (IRC)

For evaluation for compliance with codes adopted by the Los Angeles Department of Building and Safety (LADBS), see ESR-2652 LABC and LARC Supplement.

Property evaluated:

Structural

2.0 USES

The Strong-Wall® High Strength Wood Shearwall Panels (WSWHs) described in this evaluation report noted as Strong-Wall Panels hereafter in this evaluation report, are recognized for use as shear walls (substituting for or to be used with code-prescribed shear walls of light frame construction) in wood framed buildings regulated by the IBC and IRC. The Strong-Wall panels are permitted to replace each 4 feet (1219 mm) length of braced wall panel specified in Section 2308.6 of the 2021, 2018 and 2015 IBC (Section 2308.9.3 of the 2012 and 2009 IBC, as applicable) and Section R602.10 of the IRC, in accordance with Section 4.1.3 of this report.

3.0 DESCRIPTION

3.1 General:

The Strong-Wall panels are prefabricated, wood-based, shear-resisting wall assemblies, designed and constructed to support gravity loads and to resist lateral in-plane and out-of-plane wind and seismic loads in wood framed wall construction. Each assembled Strong-Wall panel features two factory-installed hold-downs as described in Section 3.2.2.1 attached to the Strong-Wall panel body described in Section 3.2.1.1 and factory-routed chases to accommodate plumbing and electrical. Each Strong-Wall panel is also packaged with an installation hardware kit as described in Section 3.2.2.2 . Additional components required for Strong-Wall panel installation, which are to be installed in the field, are described in Section 3.2.2.

The WSWH panel may be used in a standard application as illustrated in Figure 1, or as part of a portal frame system as illustrated in Figure 3. Standard and portal Strong-Wall panels must be supported directly on a concrete foundation.

The Strong-Wall panels are designed for installations in single-story or multi-story buildings of wood light-frame construction. The WSWH may be used with wood floor systems by extending the anchor bolts and installing compression nuts and solid blocking below the wall or may be stacked up to two stories when supported directly on a concrete foundation. Figure 4 illustrates raised floor applications using wood floor connection kit (WSWH-RF_KT) andstacked applications using a two-story stacked wall connection kit (WSWH-TSS_KT).

The Strong-Wall panels are supplied with openings and chases as illustrated in Figure 5 for the WSWH.

The Strong-Wall panels described in this report are permitted to have shear wall aspect ratios greater than those specified in Table 4.3.3 of the 2021 AWC Special Design Provisions for Wind and Seismic SDPWS under the 2021 IBC (Table 4.3.4 of the 2015 and 2008 AWC Special Design Provisions for Wind and Seismic SDPWS under the 2018, 2015, and 2012 and 2009 IBC, as applicable), since the allowable shear loads recognized in this evaluation report are based on cyclic load tests in accordance with the ICC-ES Acceptance Criteria for Prefabricated Wood Shear Panels (AC130).

3.2 Materials:

3.2.1 Wood Components:

3.2.1.1 WSWH Body: The WSWH body consists of a preconfigured piece of Laminated Strand Lumber (LSL) recognized in an ICC-ES evaluation report. The WSWH body is manufactured to meet specifications noted in the

ICC-ES Evaluation Reports are not to be construed as representing aesthetics or any other attributes not specifically addressed, nor are they to be construed as an endorsement of the subject of the report or a recommendation for its use. There is no warranty by ICC Evaluation Service, LLC, express or implied, as to any finding or other matter in this report, or as to any product covered by the report.

Copyright © 2022 ICC Evaluation Service, LLC. All rights reserved.

applicable manufacturing standard associated with this report.

3.2.1.2 Portal Column: Columns used in a single portal may be structural composite lumber, structural glued-laminated timber, or solid sawn lumber and are not supplied by Simpson Strong-Tie. Minimum column dimensions are 3 inches by $3^1/_2$ inches (76 mm by 89 mm).

3.2.1.3 Portal Header: The portal header may be structural composite lumber, such as laminated strand lumber, parallel strand lumber, or laminated veneer lumber, structural glued-laminate timber, or solid sawn lumber, and is not supplied by Simpson Strong-Tie. Minimum and maximum header widths are 3 inches (76 mm) and $5^1/_2$ inches (140 mm), respectively. Minimum and maximum header depths are $11^1/_4$ inches (286 mm) and 18 inches (457 mm), respectively.

The clear span of the portal header must be at least 8 feet (2.44 m) and no more than 18 feet 6 inches (5.64 m). The header dimensions and clear span must be proportioned such that the minimum header stiffness and maximum header stiffness, K_{beam}, are 90 lbs/in. (15.8 N/mm) and 4000 lbs./in. (700 N/mm), respectively. Header stiffness, K_{beam}, is defined as: $K_{beam} = Ebd^3/12L^3$

where:

E = Header modulus of elasticity, psi (N/mm^2).

b = Header width, inches (mm).

d = Header depth, inches (mm).

L = Header clear span, inches (mm).

3.2.2 Steel Components: The following components are provided by Simpson Strong-Tie, with the exception of field-attachment nails which must be sourced by the installer..

3.2.2.1 WSWH Hold-Down: A proprietary welded steel assembly manufactured to meet specifications noted in the manufacturing standard associated with this report.

3.2.2.2 WSWH Installation Hardware Kit: Minimum ASTM A36, 1-inch-thick-by-$2^1/_2$-inch-by-$3^1/_2$-inch (25 mm by 64 mm by 89 mm) heavy bearing plate and 1-inch (25 mm) heavy hex nuts complying with ASTM A563 Grade DH or ASTM A194 Grade 2H must be used to attach the WSWH Strong-Wall panels to the anchor bolts.

3.2.2.3 WSWH-TP: A single proprietary galvanized steel plate manufactured to meet the specifications noted in the manufacturing standard associated with this report is included with each WSWH shear panel. The plate may be installed on either face of the shear panel using a combination of Simpson Strong-Tie SDS-Series screws (see Section 3.2.2.4) and Simpson Strong-Tie SWS Series screws (see Section 3.2.2.5). See Figure 2 for installation information.

3.2.2.4 Simpson Strong-Tie® Strong-Drive® SDS-Series Screws: The SDS screws, supplied by Simpson Strong-Tie, are described in ICC-ES evaluation report ESR-2236. See Figure 2 for additional information.

3.2.2.5 Simpson Strong-Tie® Shearwall SWS-Series Screws: The SWS screws, supplied by Simpson Strong-Tie, are proprietary threaded fasteners manufactured to meet specifications noted in the manufacturing standard associated with this report.

3.2.2.6 Portal Strap: A proprietary, galvanized steel strap manufactured to meet specifications noted in the manufacturing standard associated with this report. Each strap must be nailed with a minimum of sixteen (16) field-attachment nails (see Section 3.2.2.7). Individual portal straps are identified by model ID WSWH-PS or WSW-PS. When required, a kit containing (4) portal straps, and identified by model ID WSWH-PK or WSW-PK as applicable, may be ordered. See Figure 3 for additional information.

3.2.2.7 Field-Attachment Nail: Minimum 2½-inch-long-by-0.148-inch-diameter (64 mm by 3.8 mm) carbon steel nails, complying with ASTM F1667.

3.2.2.8 WSWH Anchorage Plate Washer: Minimum ASTM A36, $^5/_8$-inch-thick-by-$2^3/_4$-inch (16 mm by 70 mm) square steel washer must be used for the WSWH Strong-Wall panels.

3.2.2.9 Anchorage Heavy Hex Nut: Anchorage nuts are heavy hex nuts and must comply with the minimum grade specified for the connected anchor bolt or rod. Coupler nuts must comply with the same specification as the nuts for proof load stresses. A 1-inch (25 mm) nut must be used for the WSWH Strong-Wall panels.

3.2.2.10 WSWH Anchor Bolts and Rods: A 1-inch-diameter (25 mm) threaded rod is used for WSWH Strong-Wall panels. For installations on concrete where high-strength bolts are specified in the tables, the anchor bolts must comply with the IBC and be high-strength material with a minimum yield stress of 105,000 psi (724 MPa) and a minimum tensile strength of 125,000 psi (862 MPa). Anchor bolts complying with ASTM A307 or F1554 Grade 36 may be substituted when substantiating calculations are submitted by a registered design professional to the building official for approval. For braced wall panels, bolts or rods complying with ASTM A307 or F1554 Grade 36 may be used without substantiating calculations. WSWH-AB anchor bolts comply with ASTM F1554, Grade 36 (noted as "STANDARD"). WSWH-ABHS anchor bolts with a model number suffix "HS" comply with ASTM A193 Grade B7 (noted as "HIGH STRENGTH"). WSWH-HSR extension rods also comply with ASTM A193 Grade B7. The pre-assembled anchor bolt models noted above are manufactured to meet the specifications in the manufacturing standard associated with this report. See Figures 6 and 7 for additional information.

3.2.2.11 Anchor Template: The Strong-Wall panel anchor template is a proprietary galvanized steel plate manufactured to meet the specifications noted in the manufacturing standard associated with this report. It is a reusable form-mounted template that allows precise bolt placement and is removed once the concrete has sufficiently cured. See Figure 6 for additional information.

3.2.2.12 WSWH-STP: The proprietary shear-transfer plate manufactured to meet the specifications noted in the manufacturing standard associated with this report is included in each WSWH shear panel. The vertical leg shall attach to the outside face of the rim joist width with field-attachment nails (see Section 3.2.2.7).

3.2.2.13 WSWH-MSKHD Multi-Story Kit Hold-down: A proprietary welded steel assembly manufactured to meet specifications in the manufacturing standard associated with this report.

4.0 DESIGN AND INSTALLATION

4.1 Design:

4.1.1 General: The tabulated allowable stress design (ASD) in-plane shear values provided in Tables 2 and 3 for standard and portal applications respectively, apply to WSWH panels supported directly on normal weight concrete

foundations with minimum specified compressive strengths as listed in the applicable table. ASD in-plane shear values for WSWH panels installed on wood floor framing and in two-story stacked applications are provided in Tables 4 and 5, respectively. Concrete must be normalweight with minimum specified compressive strength, f'_c, of 2,500 psi (17.2 MPa) or as required in accordance with the applicable code, or as noted in the footnotes to the tables in this report. The top-of-panel drifts noted in Tables 2 through 5 correspond to the tabulated ASD in-plane shear loads.

The tabulated ASD out-of-plane lateral strength values are provided in Table 6 for the WSWH panels supported on normal weight concrete foundations. The ASD axial strength values of the WSWH panels supported on normal weight concrete foundations are noted in Table 7 of this report. The ASD out-of-plane lateral strength and ASD axial strength of WSWH panels supported on raised floor and stacked installations must be established by a registered design professional.

Allowable ASD in-plane shear values provided in Tables 2 through 5 of this report are applicable to both ASD basic load combinations in 2021 IBC Section 1605.1 (2018, 2015, 2012 and 2009 IBC 1605.3.1) and the alternative basic load combinations in 2021 IBC Section 1605.2 (2018, 2015, 2012 and 2009 IBC Section 1605.3.2). Strong-Wall panels may be used as components within a seismic-force-resisting system consisting of light-framed load-bearing or non-load-bearing wood walls with wood structural panels, provided the following seismic design coefficients and factors are used in design:

PARAMETER	IBC
Response Modification Coefficient	R = 6½
System Overstrength Factor	Ω_0 = 3[1]
Deflection Amplification Factor	C_d = 4

[1]Where Strong-Wall panels are installed in structures with flexible diaphragms, as determined in accordance with Section 12.3.1 of ASCE/SEI 7, the tabulated value of Ω_0 may be reduced in accordance with Footnote b, Table 12.2-1 of ASCE/SEI 7-16 (Footnote g, Table 12.2-1 of ASCE/SEI 7-10), as applicable.

Analysis and design of structures incorporating Strong-Wall panels must comply with the applicable code, including IBC Section 1604.4. Where Strong-Wall panels of the same height but different widths are placed in a wall and/or combined with other shear-resisting elements, the applied loads must be proportioned based on relative lateral stiffness of the vertical resisting elements in accordance with ASCE/SEI 7 Section 12.8.4. Any combination with other lateral-force-resisting elements for which the stiffness cannot be determined by a rational engineering analysis as required by IBC Section 1604.4 is prohibited.

Installation on masonry walls or foundations or steel beams may be permitted, subject to the approval of the code official, provided calculations and construction details substantiating the connection to and adequacy of the supporting masonry or steel member supporting the Strong-Wall panel are prepared by a registered design professional. Where Strong-Wall panels are supported directly on steel beams, the additional top-of-panel drift contributed by beam deflection and the connection between panel and the beam, as applicable, must be added to the overall top-of-panel drift. Welding or modification of the hold-down is not permitted.

WSWH Strong-Wall panels may be stacked up to two stories provided the allowable values indicated in Table 5 of this report, as applicable, are not exceeded, and the anchorage force must include evaluation of cumulative overturning effect.

The foundation must be designed to resist all loads transferred, including overturning moment induced by the Strong-Wall panel.

4.1.2 Garage Portal Strong-Wall Panel Systems: Beams for garage portal systems must be designed for the load combinations specified in 2021 IBC Section 1605.1 (2018, 2015, 2012 and 2009 IBC. For all load combinations, gravity loads must be considered to induce only simple span moments in the beam. For load combinations that include lateral load, a concentrated end moment equal to the top of wall moment, noted in this section, must be placed at the end of the beam that is connected to the Strong-Wall panel according to the following: For 12-inch-wide (305 mm) panels with a height of 93¼ inches (2369 mm) or less, the moment induced into the header of the portal frame system must be taken as 20 percent of the total moment due to the in-plane lateral load; and for 18-inch-wide (457 mm) panels with a height of 93¼ inches (2369 mm) or less, the moment induced into the header of the portal frame system must be taken as 10 percent of the total moment due to the in-plane lateral load. Allowable values for panel models described above when using the portal straps described in Section 3.2.2.6 are provided in Table 3 of this report. For all other panel models, the total moment due to the in-plane lateral load is resisted at the base of the Strong-Wall panel and allowable values for standard application Strong-Wall panels shown in Table 2 of this report shall apply. The total moment due to the in-plane lateral load for the applicable panels is calculated as the design lateral shear times the panel height as defined in Tables 1 through 3 of this report.

4.1.3 Braced Wall Panels: Each Strong-Wall panel, 12 feet (3660 mm) or less in height, may replace each alternate braced wall panel or each 4 feet (1219 mm) of braced wall panel length specified in Section 2308.6 of the 2021, 2018 and 2015 IBC (Section 2308.9.3 of the 2012 and 2009 IBC, as applicable) and Section R602.10 of the IRC. The required length of bracing shall be based on wood structural panel sheathing (Method WSP in IBC and IRC).

4.1.4 Anchorage to Concrete: The anchorage-to-concrete details shown in Figures 6 and 7 of this report conform to Sections 1901.3 and 1905 of the 2021 IBC which refer to Chapter 17 of ACI 318-19 (Sections 1901.3 and 1905 of the 2018 and 2015 IBC which refer to Chapter 17 of ACI 318-14; Section 1909 of the 2012 IBC or Section 1912 of the 2009 IBC, as applicable, which refers to ACI 318 Appendix D) and may be used to anchor Strong-Wall panels provided the design anchor tension force does not exceed the allowable anchor tension due to overturning listed. Anchorage-to-concrete details shown in Figures 6 and 7 that are used for seismic resistance comply with the ductility requirements of ACI 318-19 Section 1710.5.3 (ACI 318-14 Section 17.2.3.4.3 and ACI 318-11 Appendix D Section D.3.3.4.3, as applicable). Tie or hairpin reinforcement in accordance with Figures 6 and 7 is not required for interior foundation applications (panel installed away from edge of concrete) or braced wall panel applications. Alternatively, subjected to approval of the code official, anchorage elements may be determined by a registered design professional and installed to resist tension and shear loads to accommodate the specific condition and critical load demand in accordance with Chapters 19 and 21 of the IBC, as applicable.

Strong-Wall panel anchorage solutions for grade beam applications conform to Sections 1901.3 and 1905 of the

2021 IBC which refer to Chapter 17 of ACI 318-19 (Sections 1901.3 and 1905 of the 2018 and 2015 IBC which refer to Chapter 17 of ACI 318-14; Section 1909 of the 2012 IBC refers to ACI 318-11 Appendix D). Anchor reinforcement is required for grade beam applications. Anchor reinforcement described in Figures 6 and 7 provides a resistance that is equal to or greater than 1.2 times the nominal tensile strength of the steel anchor. Testing has shown that closed-tie anchor reinforcement is critical to maintain the integrity of the reinforced core where the anchor is located. In addition, plastic hinging must be prevented at anchor locations in seismic applications in accordance with ACI 318-19 Section 17.10.2 (ACI 318-14 Section 17.2.3.2 ;ACI 318-11 Section D.3.3.2) to achieve expected anchor-to-concrete performance. Physical testing was used to validate anchor reinforcement configuration and placement and has shown that in order to achieve expected performance, concrete member design strength should consider factored anchor demand for wind applications and amplified anchor demand for seismic applications. Figures 6 and 7 provide anchor reinforcement details and design moments to be applied at anchor locations. The amplified LRFD design seismic moments described in Figures 6 and 7 are based on the lowest of the following:

(1): 85 percent of the maximum lateral load resisted by the tested WSWH panel when tested in accordance with AC130.

(2): WSWH panel LRFD lateral strength multiplied by a 2.5 overstrength factor.

(3): Lateral shear based on the WSWH panel overturning resistance at maximum anchor tension resistance. The Strong-Wall panel overturning resistance is based on using 1.2 times the anchor nominal tensile strength, and corresponding LRFD axial compression load, which is 1.2 times the allowable axial load listed in Tables 2 through 5 of this report.

The design hold-down tension/uplift force due to overturning, T, for hold-down anchorage, assuming no resisting axial load, may be determined using the following formula:

$$T = \frac{\sum(Shear\ x\ Height)}{Moment\ Arm}$$

where:

- Shear = Applied design in-plane shear load for Standard, Portal Frame System, Raised Floor panel and Stacked applications, as applicable.
- Height = Strong-Wall panel height per Tables 1 through 5, as applicable.
- Moment Arm = Strong-Wall panel moment arm per Tables 2, 3, and 4, as applicable.

The hold-down uplift force due to overturning for the 12-inch-wide Strong-Wall panels with heights less than or equal to 93.25 inches and 18-inch-wide Strong-Wall panels with heights less than or equal to 93.25 inches, when connected to a header/beam with portal straps in a garage portal frame system, may be taken as 80 percent and 90 percent, respectively, of the calculated hold-down uplift force due to overturning.

The WSWH hold-down uplift force due to overturning for stacked applications must take into account the effects of cumulative overturning. The tabulated allowable base moments in Table 5B of this report are for panels supported directly on normal weight concrete foundations with a minimum specified compressive strength of 2,500 psi (17.2 MPa).

4.1.5 Anchorage to Masonry: Anchorage to masonry foundations or foundation walls for Strong-Wall panels described in this report must be designed and detailed by a registered design professional in accordance with Chapter 21 of the IBC and this report, and the design and details are subject to approval of the code official.

4.1.6 Anchorage to Steel Beams: Anchorage to steel beams for Strong-Wall panels described in this report must be designed and detailed by a registered design professional in accordance with Chapter 22 of the IBC and this report, and the design and details are subject to approval of the code official. Welding or modification of the hold-down is not permitted.

4.2 Installation:

4.2.1 General: The Strong-Wall panels must be installed within the wall envelope in accordance with the manufacturer's installation instructions, the applicable code, and this report. Installation details shown in Figures 1 through 5 of this report represent typical surrounding framing conditions and connection requirements for standard, portal frame, raised floor and multi-story Strong-Wall panel applications as referenced in this report. The WSWH may be field-trimmed to a minimum height of 74 1/2 inches (1892 mm) per the manufacturer's installation instructions. Field-drilling of the Strong-Wall panel is not permitted except as indicated in Figure 5.

Corrosion-resistant fasteners and connectors complying with Section 2304.10.5 of the 2021, 2018 and 2015 IBC (Section 2304.9.5 of the 2012 and 2009 IBC, as applicable) must be used when the Strong-Wall panel is in contact with fire-retardant or preservative-treated wood. The wood portion of the panel must not be in direct contact with concrete and is designed accordingly. Anchor bolts and rods must be in accordance with Section 3.2.2.10 of this report and be placed using the form-mounted reusable template as described in Section 3.2.2.11 of this report.

4.2.2 Installation on Concrete Foundation: The WSWH panel must be installed directly on a concrete foundation over two anchor bolts with diameters as noted in Table 1. Templates for either interior or exterior wall applications are available from Simpson Strong-tie to assist in the placement of the anchor bolts as shown in Figure 6 of this report. The panel base plate must be secured to the anchor bolts with nuts complying with the specifications set forth for the anchor bolt grade.

4.2.3 Installation on Masonry or Steel: Installation on masonry walls or foundations or steel beams may be permitted, subject to approval of the code official based on calculations and details prepared by the registered design professional.

4.2.4 Garage Portal Strong-Wall System: For portal frame applications, the header must be connected to the Strong-Wall panel using the connectors and/or fasteners described in Sections 3.2.2.2 through 3.2.2.7, as applicable.

The header must be connected to the Strong-Wall panel using four proprietary portal straps described in Section 3.2.2.6 (two on the front face and two on the back). In single portal frame installations, the header must be connected to the column with a connection capable of resisting a minimum allowable uplift of 1,000 pounds (4450 N). At the bottom of the column, a hold-down device capable of resisting a minimum allowable tension load of 1,000 pounds (4450 N) must be used to connect the column to the foundation. When using a 3-inch-wide (76 mm) 2-ply header

in portal frame applications, 1/2-inch-thick (13 mm) furring with a width equal to the Strong-Wall panel width and height equal to the header depth must be installed on one side of the header between the header and each steel strap. The furring must be connected to the header with 10-8d common nails. When using a 3 1/8-inch-wide (79 mm) header in portal frame applications, a 3/8-inch-thick (9.5 mm) wood furring strip [2½ inches by 10 inches (64 mm by 254 mm), minimum] must be installed (on one side of the header) between the header and each steel strap. The furring strip must be connected to the header with 10-8d common nails. When using a 5 1/8-, 5 1/4-, or 5 1/2-inch-wide (130, 133, or 140 mm) beam, 1 3/4-inch-thick (44 mm) wood furring must be installed on the inside face of the Strong-Wall panel between the panel and both steel straps. The furring must be connected to the header with fasteners per Figure 3 of this report.

4.2.5 Installation on Wood Floor: Table 4 and Figure 4 of this report provide installation requirements and details. Wood floor connection kits (WSWH-RF_KT) are available and include installation instructions, threaded rod extensions, coupler nuts, heavy hex nuts, and a shear-transfer plate (WSWH-STP).

4.2.6 Two-Story Stacked Installations: Table 5 and Figure 4 of this report provide installation requirements and details. Two-story stacked connection kits (WSWH-TSS_KT) are available and include installation instructions, threaded rods, heavy hex nuts, multi-story kit hold-down (WSWH-MSKHD) and a shear-transfer plate (WSWH-STP).

4.2.7 Back-to-back Installations: The Strong-Wall® panels (WSWH) may be installed back-to-back. Figures 2, 3, and 7 of this report provide installation, connection requirements and anchorage details.

4.3 Special Inspection:

4.3.1 General: If special inspection is required, the inspector is responsible for verifying proper hold-down anchor type, size and placement, including embedment length, spacing, and edge distance. The inspector must also verify proper connection to the member above per Figure 1.

4.3.2 2021 IBC: Periodic special inspection must be provided in accordance with Sections 1705.1.1, 1705.12.1 or 1705.13.2, as applicable, with the exception of those structures that qualify under Section 1704.2, 1704.3 or 1705.3, and subject to approval of the code official.

4.3.3 2018 and 2015 IBC: Periodic special inspection must be provided in accordance with Section 1705.1.1, 1705.11.1 or 1705.12.2, as applicable, with the exception of those structures that qualify under Section 1704.2, 1704.3, or 1705.3 and subject to approval of the code official.

4.3.4 2012 IBC: Periodic special inspection must be provided in accordance with Section 1705.1.1, 1705.10.1 or 1705.11.2, as applicable, with the exception of those structures that qualify under Section 1704.2, 1704.3, or 1705.3 and subject to approval of the code official.

4.3.5 2009 IBC: Periodic special inspection must be provided in accordance with Section 1704.15, 1706.2 or 1707.3, as applicable, with the exception of those structures that qualify under Section 1704.1, 1704.4, or 1705.3 and subject to approval of the code official.

4.3.6 IRC: In jurisdictions governed by the IRC, special inspections are not required, except where an engineered design according to Section R301.1.3 of the IRC is used. Where an engineered design is used, special inspections in accordance with Section 4.3 of this report must be provided.

5.0 CONDITIONS OF USE

The Strong-Wall® panels (WSWH) described in this report comply with, or are suitable alternatives to what is specified in, those codes listed in Section 1.0 of this report, subject to the following conditions:

5.1 The WSWH panels must be installed in accordance with this report, the manufacturer's instructions and the building plans approved by the code official. In the event of a conflict between this report and the manufacturer's installation instructions, this report governs.

5.2 ASD design loads and drifts must not exceed the allowable loads and drifts set forth this report.

5.3 Calculations and details justifying that the use of the Strong-Wall® panels (WSWH) is in compliance with the applicable code and this evaluation report must be submitted to the code official for approval, except for the braced and alternate braced wall substitutions noted in Section 4.1.3 of this report. The calculations and details must be prepared by a registered design professional where required by the statutes of the jurisdiction in which the project is to be constructed.

5.4 Design of the concrete foundation system, masonry wall or foundation, or steel beam supporting the Strong-Wall panel is outside the scope of this report.

5.5 The Strong-Wall® High Strength Wood Shearwall panels are produced at the Simpson Strong-Tie facilities located in Stockton, California, under a quality-control program with inspections by ICC-ES.

6.0 EVIDENCE SUBMITTED

- Data in accordance with the ICC-ES Acceptance Criteria for Prefabricated Wood Shear Panels (AC130), dated March 2018 (editorially revised December 2020).
- Data in accordance with the ICC-ES Acceptance Criteria for Joist Hangers and Similar Devices (AC13), dated October 2018 (editorially revised December 2020).
- Additional data was submitted for the anchorage to concrete in accordance with ACI 318-19, ACI 318-14 and ACI 318-11.

7.0 IDENTIFICATION AND CONTACT INFORMATION

7.1 The Strong-Wall® High Strength Wood Shearwall Panels are identified with a label bearing the manufacturer's name (Simpson Strong-Tie Company Inc.), the product name or designation, the production date, and the evaluation report number (ESR-2652).

7.2 The report holder's contact information is the following:

SIMPSON STRONG-TIE COMPANY, INC
5956 WEST LAS POSITAS BOULEVARD
PLEASANTON, CALIFORNIA 94588
(800) 999-5099
www.strongtie.com

TABLE 1—STRONG-WALL HIGH STRENGTH WOOD SHEARWALL (WSWH) PANEL DESCRIPTION

Strong-Wall High Strength Wood Shearwall Model	Panel Information			Anchor Bolts	
	Nominal Width, W (in.)	Height, H (in.)	Weight (lb.)	Qty.	Dia. (in.)
WSWH12x7	12	84	105	2	1
WSWH18x7	18	84	155	2	1
WSWH12x8	12	96	120	2	1
WSWH18x8	18	96	175	2	1
WSWH24x8	24	96	225	2	1
WSWH12x9	12	108	130	2	1
WSWH18x9	18	108	195	2	1
WSWH24x9	24	108	250	2	1
WSWH12x10	12	120	145	2	1
WSWH18x10	18	120	210	2	1
WSWH24x10	24	120	275	2	1
WSWH12x12	12	144	165	2	1
WSWH18x12	18	144	245	2	1
WSWH24x12	24	144	325	2	1
WSWH18x14	18	168	285	2	1
WSWH24x14	24	168	370	2	1
WSWH24x16	24	192	420	2	1
WSWH18x20	18	240	390	2	1
WSWH24x20	24	240	520	2	1

For **SI**: 1 inch = 25.4 mm, 1 lb. = 4.45 N.

1. To achieve evaluated panel heights listed in the allowable load table (Tables 2, 3, 4 and 5), or for those not listed, order the next tallest panel and trim to fit. Minimum trimmed height for all panels is $74^1/_2$".
2. All panels are supplied with pre-attached holdowns, two heavy hex nuts, two heavy bearing plates, one WSWH-TP top connection plate (width based on panel model), required fasteners and installation instructions.
3. All panels are $3^1/_2$" thick.

TABLE 2—ALLOWABLE ASD IN-PLANE SHEAR FOR STANDARD APPLICATION STRONG-WALL HIGH STRENGTH WOOD SHEARWALL (WSWH) ON CONCRETE FOUNDATION

Strong-Wall High Strength Wood Shearwall Model	Panel Evaluation Height, H_e (in.)	Allow. Vertical Load, P (lb.)	2,500 psi Concrete						3,000 psi Concrete					
			Seismic			Wind			Seismic			Wind		
			Allow. ASD Shear Load, V (lb.)	Drift at Allow. Shear, Δ (in.)	Anchor Tension at Allow. Shear, T (lb.)	Allow. ASD Shear Load, V (lb.)	Drift at Allow. Shear, Δ (in.)	Anchor Tension at Allow. Shear, T (lb.)	Allow. ASD Shear Load, V (lb.)	Drift at Allow. Shear, Δ (in.)	Anchor Tension at Allow. Shear, T (lb.)	Allow. ASD Shear Load, V (lb.)	Drift at Allow. Shear, Δ (in.)	Anchor Tension at Allow. Shear, T (lb.)
WSWH12x7	78	1,000	1,300	0.32	13,295	1,670	0.43	17,075	1,300	0.32	13,295	1,670	0.43	17,075
		4,000	1,300	0.32	13,295	1,670	0.43	17,075	1,300	0.32	13,295	1,670	0.43	17,075
		7,500	1,300	0.32	13,295	1,670	0.43	17,075	1,300	0.32	13,295	1,670	0.43	17,075
WSWH18x7	78	1,000	3,795	0.32	23,680	4,470	0.39	27,890	3,795	0.32	23,680	4,470	0.39	27,890
		4,000	3,795	0.32	23,680	4,365	0.38	27,245	3,795	0.32	23,680	4,470	0.39	27,890
		7,500	3,795	0.32	23,680	4,050	0.36	25,285	3,795	0.32	23,680	4,470	0.39	27,890
WSWH24x7	78	1,000	7,450	0.30	33,210	7,795	0.34	34,755	7,450	0.30	33,210	7,795	0.34	34,755
		4,000	7,450	0.30	33,210	7,565	0.33	33,715	7,450	0.30	33,210	7,795	0.34	34,755
		7,500	7,115	0.28	31,715	7,115	0.31	31,715	7,450	0.30	33,210	7,795	0.34	34,755
WSWH12x8	93¼	1,000	1,030	0.40	12,580	1,325	0.53	16,195	1,030	0.40	12,580	1,325	0.53	16,195
		4,000	1,030	0.40	12,580	1,325	0.53	16,195	1,030	0.40	12,580	1,325	0.53	16,195
		7,500	1,030	0.40	12,580	1,325	0.53	16,195	1,030	0.40	12,580	1,325	0.53	16,195
WSWH18x8	93¼	1,000	3,060	0.39	22,835	3,880	0.52	28,925	3,060	0.39	22,835	3,955	0.53	29,490
		4,000	3,060	0.39	22,835	3,650	0.49	27,245	3,060	0.39	22,835	3,955	0.53	29,490
		7,500	3,060	0.39	22,835	3,390	0.46	25,285	3,060	0.39	22,835	3,955	0.53	29,490
WSWH24x8	93¼	1,000	6,240	0.37	33,240	6,650	0.43	35,430	6,240	0.37	33,240	6,910	0.45	36,815
		4,000	6,240	0.37	33,240	6,330	0.41	33,715	6,240	0.37	33,240	6,910	0.45	36,815
		7,500	5,950	0.35	31,715	5,950	0.38	31,715	6,240	0.37	33,240	6,910	0.45	36,815
WSWH12x9	105¼	1,000	850	0.45	11,750	1,095	0.60	15,145	850	0.45	11,750	1,095	0.60	15,145
		4,000	850	0.45	11,750	1,095	0.60	15,145	850	0.45	11,750	1,095	0.60	15,145
		7,500	850	0.45	11,750	1,095	0.60	15,145	850	0.45	11,750	1,095	0.60	15,145
WSWH18x9	105¼	1,000	2,575	0.45	21,680	3,325	0.60	27,975	2,575	0.45	21,680	3,325	0.60	27,975
		4,000	2,575	0.45	21,680	3,235	0.58	27,245	2,575	0.45	21,680	3,325	0.60	27,975
		7,500	2,575	0.45	21,680	3,005	0.54	25,285	2,575	0.45	21,680	3,325	0.60	27,975
WSWH24x9	105¼	1,000	5,150	0.43	30,975	5,890	0.52	35,430	5,150	0.43	30,975	6,120	0.54	36,815
		4,000	5,150	0.43	30,975	5,605	0.50	33,715	5,150	0.43	30,975	6,120	0.54	36,815
		7,500	5,150	0.43	30,975	5,275	0.47	31,715	5,150	0.43	30,975	6,120	0.54	36,815
WSWH12x10	117¼	1,000	700	0.50	10,750	900	0.67	13,855	700	0.50	10,750	900	0.67	13,855
		4,000	700	0.50	10,750	900	0.67	13,855	700	0.50	10,750	900	0.67	13,855
		7,500	700	0.50	10,750	900	0.67	13,855	700	0.50	10,750	900	0.67	13,855
WSWH18x10	117¼	1,000	2,140	0.50	20,055	2,755	0.67	25,840	2,140	0.50	20,055	2,755	0.67	25,840
		4,000	2,140	0.50	20,055	2,755	0.67	25,840	2,140	0.50	20,055	2,755	0.67	25,840
		7,500	2,140	0.50	20,055	2,695	0.65	25,285	2,140	0.50	20,055	2,755	0.67	25,840
WSWH24x10	117¼	1,000	4,010	0.48	26,860	5,215	0.67	34,935	4,010	0.48	26,860	5,215	0.67	34,935
		4,000	4,010	0.48	26,860	5,030	0.64	33,715	4,010	0.48	26,860	5,215	0.67	34,935
		7,500	4,010	0.48	26,860	4,735	0.61	31,715	4,010	0.48	26,860	5,215	0.67	34,935
WSWH12x11	129¼	1,000	595	0.56	10,055	765	0.73	12,930	595	0.56	10,055	765	0.73	12,930
		4,000	595	0.56	10,055	765	0.73	12,930	595	0.56	10,055	765	0.73	12,930
		7,500	595	0.56	10,055	765	0.73	12,930	595	0.56	10,055	765	0.73	12,930
WSWH18x11	129¼	1,000	1,960	0.55	20,240	2,520	0.73	26,060	1,960	0.55	20,240	2,520	0.73	26,060
		4,000	1,960	0.55	20,240	2,520	0.73	26,060	1,960	0.55	20,240	2,520	0.73	26,060
		7,500	1,960	0.55	20,240	2,445	0.71	25,285	1,960	0.55	20,240	2,520	0.73	26,060
WSWH24x11	129¼	1,000	4,000	0.54	29,550	4,795	0.68	35,430	4,000	0.54	29,550	4,985	0.70	36,815
		4,000	4,000	0.54	29,550	4,565	0.64	33,715	4,000	0.54	29,550	4,985	0.70	36,815
		7,500	4,000	0.54	29,550	4,295	0.60	31,715	4,000	0.54	29,550	4,985	0.70	36,815
WSWH12x12	144	1,000	505	0.61	9,495	645	0.80	12,150	505	0.61	9,495	645	0.80	12,150
		4,000	505	0.61	9,495	645	0.80	12,150	505	0.61	9,495	645	0.80	12,150
		7,500	505	0.61	9,495	645	0.80	12,150	505	0.61	9,495	645	0.80	12,150
WSWH18x12	144	1,000	1,705	0.61	19,665	2,195	0.80	25,285	1,705	0.61	19,665	2,195	0.80	25,285
		4,000	1,705	0.61	19,665	2,195	0.80	25,285	1,705	0.61	19,665	2,195	0.80	25,285
		7,500	1,705	0.61	19,665	2,195	0.80	25,285	1,705	0.61	19,665	2,195	0.80	25,285
WSWH24x12	144	1,000	3,525	0.60	29,015	4,305	0.75	35,430	3,525	0.60	29,015	4,475	0.78	36,815
		4,000	3,525	0.60	29,015	4,100	0.72	33,715	3,525	0.60	29,015	4,475	0.78	36,815
		7,500	3,525	0.60	29,015	3,855	0.67	31,715	3,525	0.60	29,015	4,475	0.78	36,815

TABLE 2—ALLOWABLE ASD IN-PLANE SHEAR FOR STANDARD APPLICATION STRONG-WALL HIGH STRENGTH WOOD SHEARWALL (WSWH) ON CONCRETE FOUNDATION (CONTINUED)

Strong-Wall High Strength Wood Shearwall Model	Panel Evaluation Height, H_e (in.)	Allow. Vertical Load, P (lb.)	2,500 psi Concrete						3,000 psi Concrete					
			Seismic			Wind			Seismic			Wind		
			Allow. ASD Shear Load, V (lb.)	Drift at Allow. Shear, Δ (in.)	Anchor Tension at Allow. Shear, T (lb.)	Allow. ASD Shear Load, V (lb.)	Drift at Allow. Shear, Δ (in.)	Anchor Tension at Allow. Shear, T (lb.)	Allow. ASD Shear Load, V (lb.)	Drift at Allow. Shear, Δ (in.)	Anchor Tension at Allow. Shear, T (lb.)	Allow. ASD Shear Load, V (lb.)	Drift at Allow. Shear, Δ (in.)	Anchor Tension at Allow. Shear, T (lb.)
WSWH18x13	156	1,000	1,490	0.66	18,575	1,910	0.87	23,855	1,490	0.66	18,575	1,910	0.87	23,855
		4,000	1,490	0.66	18,575	1,910	0.87	23,855	1,490	0.66	18,575	1,910	0.87	23,855
		7,500	1,490	0.66	18,575	1,910	0.87	23,855	1,490	0.66	18,575	1,910	0.87	23,855
WSWH24x13	156	1,000	3,110	0.65	27,705	3,975	0.86	35,430	3,110	0.65	27,705	4,025	0.87	35,885
		4,000	3,110	0.65	27,705	3,780	0.81	33,715	3,110	0.65	27,705	4,025	0.87	35,885
		7,500	3,110	0.65	27,705	3,560	0.77	31,715	3,110	0.65	27,705	4,025	0.87	35,885
WSWH18x14	168	1,000	1,180	0.72	15,890	1,515	0.93	20,370	1,180	0.72	15,890	1,515	0.93	20,370
		4,000	1,180	0.72	15,890	1,515	0.93	20,370	1,180	0.72	15,890	1,515	0.93	20,370
WSWH24x14	168	1,000	2,620	0.71	25,160	3,365	0.93	32,290	2,620	0.71	25,160	3,365	0.93	32,290
		4,000	2,620	0.71	25,160	3,365	0.93	32,290	2,620	0.71	25,160	3,365	0.93	32,290
WSWH18x16	192	1,000	985	0.82	15,160	1,265	1.07	19,395	985	0.82	15,160	1,265	1.07	19,395
		4,000	985	0.82	15,160	1,265	1.07	19,395	985	0.82	15,160	1,265	1.07	19,395
WSWH24x16	192	1,000	2,130	0.82	23,345	2,735	1.07	29,990	2,130	0.82	23,345	2,735	1.07	29,990
		4,000	2,130	0.82	23,345	2,735	1.07	29,990	2,130	0.82	23,345	2,735	1.07	29,990
WSWH18x18	216	1,000	750	0.93	12,965	960	1.20	16,550	750	0.93	12,965	960	1.20	16,550
		4,000	750	0.93	12,965	960	1.20	16,550	750	0.93	12,965	960	1.20	16,550
WSWH24x18	216	1,000	1,655	0.93	20,400	2,110	1.20	26,060	1,655	0.93	20,400	2,110	1.20	26,060
		4,000	1,655	0.93	20,400	2,110	1.20	26,060	1,655	0.93	20,400	2,110	1.20	26,060
WSWH18x20	240	1,000	605	1.04	11,640	770	1.33	14,825	605	1.04	11,640	770	1.33	14,825
		4,000	605	1.04	11,640	770	1.33	14,825	605	1.04	11,640	770	1.33	14,825
WSWH24x20	240	1,000	1,350	1.04	18,500	1,720	1.33	23,590	1,350	1.04	18,500	1,720	1.33	23,590
		4,000	1,350	1.04	18,500	1,720	1.33	23,590	1,350	1.04	18,500	1,720	1.33	23,590

For **SI**: 1 inch = 25.4 mm, 1 lb. = 4.45 N.

1. Allowable ASD shear loads and anchor tension values are applicable to installations on concrete with specified compressive strengths as listed. No further increase for duration of load is allowed.
2. Allowable vertical load denotes the total maximum vertical load permitted on the panel acting in combination with the allowable shear loads.
3. Allowable shear, drift and anchor tension values may be interpolated for intermediate height or vertical loads.
4. For panels $74^1/_2$"-78" tall, use the values for a 78" tall panel.
5. High strength anchor bolts are required unless a lower strength grade is justified by the registered design professional. Figures 6 and 7 of this report provide WSWH-AB anchor bolt information and anchorage solutions.
6. See Table 6 of this report for allowable out-of-plane values; see Table 7 for allowable axial values.
7. Drifts at lower design shear may be linearly reduced.
8. Angled SDS screws may be omitted from the WSWH-TP top connection for all panels taller than 100"; reduced allowable out-of-plane load loads shall apply.
9. Tabulated anchor tension values assume no resisting vertical load. Anchor tension loads at design shear values and including the effect of vertical load may be determined using the following equation:

   $T = [(V \times H) / B] - P/2$, where:

   T = Anchor tension load (lb.); V = Design shear load (lb.); P = Applied vertical load (lb.); H = Panel height (in.)

   B = Moment arm (in.); 7.625" for WSWH12, 12.50" for WSWH18, 17.50" for WSWH24

TABLE 3—ALLOWABLE ASD IN-PLANE SHEAR FOR PORTAL APPLICATION STRONG-WALL HIGH STRENGTH WOOD SHEARWALL (WSWH) ON CONCRETE FOUNDATION

Strong-Wall High Strength Wood Shearwall Model	Panel Evaluation Height, H_e (in.)	Allow. Vertical Load, P (lb.)	2,500 psi Concrete						3,000 psi Concrete					
			Seismic			Wind			Seismic			Wind		
			Allow. ASD Shear Load, V (lb.)	Drift at Allow. Shear, Δ (in.)	Anchor Tension at Allow. Shear, T (lb.)	Allow. ASD Shear Load, V (lb.)	Drift at Allow. Shear, Δ (in.)	Anchor Tension at Allow. Shear, T (lb.)	Allow. ASD Shear Load, V (lb.)	Drift at Allow. Shear, Δ (in.)	Anchor Tension at Allow. Shear, T (lb.)	Allow. ASD Shear Load, V (lb.)	Drift at Allow. Shear, Δ (in.)	Anchor Tension at Allow. Shear, T (lb.)
WSWH12x7	78	1,000	1,780	0.39	14,550	2,285	0.53	18,715	1,780	0.39	14,550	2,285	0.53	18,715
		4,000	1,780	0.39	14,550	2,285	0.53	18,715	1,780	0.39	14,550	2,285	0.53	18,715
		7,500	1,780	0.39	14,550	2,285	0.53	18,715	1,780	0.39	14,550	2,285	0.53	18,715
WSWH18x7	78	1,000	3,980	0.38	22,345	4,580	0.47	25,715	3,980	0.38	22,345	4,580	0.47	25,715
		4,000	3,980	0.38	22,345	4,580	0.47	25,715	3,980	0.38	22,345	4,580	0.47	25,715
		7,500	3,980	0.38	22,345	4,505	0.46	25,285	3,980	0.38	22,345	4,580	0.47	25,715
WSWH24x7	78	1,000	7,450	0.30	33,210	7,950	0.35	35,430	7,450	0.30	33,210	8,260	0.36	36,815
		4,000	7,450	0.30	33,210	7,565	0.33	33,715	7,450	0.30	33,210	8,260	0.36	36,815
		7,500	7,115	0.28	31,715	7,115	0.31	31,715	7,450	0.30	33,210	8,260	0.36	36,815
WSWH12x8	85½	1,000	1,590	0.42	14,280	2,065	0.57	18,520	1,590	0.42	14,280	2,065	0.57	18,520
		4,000	1,590	0.42	14,280	2,065	0.57	18,520	1,590	0.42	14,280	2,065	0.57	18,520
		7,500	1,590	0.42	14,280	2,065	0.57	18,520	1,590	0.42	14,280	2,065	0.57	18,520
WSWH18x8	85½	1,000	3,550	0.41	21,845	4,580	0.56	28,185	3,550	0.41	21,845	4,580	0.56	28,185
		4,000	3,550	0.41	21,845	4,425	0.54	27,245	3,550	0.41	21,845	4,580	0.56	28,185
		7,500	3,550	0.41	21,845	4,110	0.50	25,285	3,550	0.41	21,845	4,580	0.56	28,185
WSWH24x8	85½	1,000	6,425	0.33	31,385	7,250	0.41	35,430	6,425	0.33	31,385	7,535	0.43	36,815
		4,000	6,425	0.33	31,385	6,900	0.39	33,715	6,425	0.33	31,385	7,535	0.43	36,815
		7,500	6,425	0.33	31,385	6,490	0.37	31,715	6,425	0.33	31,385	7,535	0.43	36,815
WSWH12x8	93¼	1,000	1,435	0.45	14,050	1,860	0.60	18,190	1,435	0.45	14,050	1,860	0.60	18,190
		4,000	1,435	0.45	14,050	1,860	0.60	18,190	1,435	0.45	14,050	1,860	0.60	18,190
		7,500	1,435	0.45	14,050	1,860	0.60	18,190	1,435	0.45	14,050	1,860	0.60	18,190
WSWH18x8	93¼	1,000	3,170	0.44	21,290	4,130	0.60	27,735	3,170	0.44	21,290	4,130	0.60	27,735
		4,000	3,170	0.44	21,290	4,060	0.59	27,245	3,170	0.44	21,290	4,130	0.60	27,735
		7,500	3,170	0.44	21,290	3,765	0.55	25,285	3,170	0.44	21,290	4,130	0.60	27,735
WSWH24x8	93¼	1,000	6,240	0.37	33,240	6,650	0.43	35,430	6,240	0.37	33,240	6,910	0.45	36,815
		4,000	6,240	0.37	33,240	6,330	0.41	33,715	6,240	0.37	33,240	6,910	0.45	36,815
		7,500	5,950	0.35	31,715	5,950	0.38	31,715	6,240	0.37	33,240	6,910	0.45	36,815

For **SI**: 1 inch = 25.4 mm, 1 lb. = 4.45 N.

1. Allowable ASD shear loads and anchor tension values are applicable to installations on concrete with specified compressive strengths as listed. No further increase for duration of load is allowed.
2. Allowable vertical load denotes the total maximum vertical load permitted on the panel acting in combination with the allowable shear loads.
3. Allowable shear, drift and anchor tension values may be interpolated for intermediate height or vertical loads.
4. For panels 74½"-78" tall, use the values for a 78" tall panel.
5. High strength anchor bolts are required unless a lower strength grade is justified by the registered design professional. Figures 6 and 7 of this report provide WSWH-AB anchor bolt information and anchorage solutions.
6. See Table 6 of this report for allowable out-of-plane values; see Table 7 for allowable axial values.
7. Allowable values shown apply to single-wall garage portal systems. For double-wall garage portal systems, allowable shear load may be taken as twice the table value.
8. Drifts at lower design shear may be linearly reduced.
9. Angled SDS screws may be omitted from the WSWH-TP top connection for all panels taller than 100"; reduced allowable out-of-plane load loads shall apply.
10. Allowable values shown in Table 2 of this report shall apply for all portal panels taller than 93¼" and for all panels installed without the portal straps described in Section 3.2.2.6.
11. Tabulated anchor tension values assume no resisting vertical load. Anchor tension loads at design shear values and including the effect of vertical load may be determined using the following equation:

    $T = [(k \times V \times H) / B] - P/2$, where:

    T = Anchor tension load (lb.); V = Design shear load (lb.); P = Applied vertical load (lb.); H = Panel height (in.)

    B = Moment arm (in.); 7.625" for WSWH12, 12.50" for WSWH18, 17.50" for WSWH24

    K = Portal factor; 0.80 for WSWH12 panels 93¼" or less in height, 0.90 for WSWH18 panels 93¼" or less in height, 1.00 for all other panels.

TABLE 4—ASD IN-PLANE SHEAR FOR RAISED FLOOR APPLICATION

APPLICATION HIGH STRENGTH WOOD SHEARWALL (WSWH) ON WOOD FLOOR SYSTEM

Model No.	Panel Evaluation Height, H_e (in.)	Seismic			Wind		
		Allowable ASD Shear Load, V (lb.)[5]	Drift at Allowable Shear, Δ (in.)	Anchor Tension at Allowable Shear, T (lb.)[7]	Allowable ASD Shear, V (lb.)[5]	Drift at Allowable Shear, Δ (in.)	Anchor Tension at Allowable Shear, T (lb.)[7]
WSWH12x7	78	820	0.34	7,870	1,045	0.43	10,030
WSWH18x7	78	2,085	0.34	11,615	2,645	0.43	14,735
WSWH24x7	78	3,950	0.30	15,405	4,445	0.33	17,335
WSWH12x8	93¼	665	0.41	7,630	855	0.52	9,815
WSWH18x8	93¼	1,680	0.42	11,190	2,135	0.53	14,220
WSWH24x8	93¼	3,310	0.42	15,435	4,205	0.53	19,605
WSWH12x9	105¼	560	0.47	7,255	710	0.60	9,195
WSWH18x9	105¼	1,475	0.43	11,090	1,935	0.56	14,545
WSWH24x9	105¼	2,830	0.43	14,895	3,700	0.56	19,470
WSWH12x10	117¼	480	0.53	6,925	610	0.67	8,805
WSWH18x10	117¼	1,220	0.53	10,220	1,550	0.67	12,980
WSWH24x10	117¼	2,410	0.53	14,130	3,060	0.67	17,940
WSWH12x11	129¼	420	0.58	6,680	535	0.73	8,510
WSWH18x11	129¼	1,070	0.58	9,880	1,355	0.73	12,510
WSWH24x11	129¼	2,105	0.58	13,605	2,670	0.73	17,255
WSWH12x12	144	355	0.63	6,290	450	0.80	7,975
WSWH18x12	144	900	0.63	9,255	1,145	0.80	11,775
WSWH24x12	144	1,780	0.63	12,815	2,260	0.80	16,270
WSWH18x13	156	810	0.68	9,025	1,025	0.87	11,420
WSWH24x13	156	1,595	0.68	12,440	2,025	0.87	15,795
WSWH18x14	168	730	0.74	8,760	930	0.93	11,160
WSWH24x14	168	1,440	0.74	12,095	1,830	0.93	15,370
WSWH18x16	192	610	0.84	8,365	775	1.07	10,630
WSWH24x16	192	1,200	0.84	11,520	1,525	1.07	14,640
WSWH18x18	216	520	0.95	8,025	660	1.20	10,185
WSWH24x18	216	1,025	0.95	11,070	1,300	1.20	14,040
WSWH18x20	240	430	1.06	7,370	545	1.34	9,345
WSWH24x20	240	910	1.01	10,920	1,170	1.30	14,040

For **SI**: 1 inch = 25.4 mm, 1 lb. = 4.45 N

1. Loads are applicable to first-story raised wood floor installations supported on concrete or masonry foundations using the ASD basic (2021 IBC Section 1605.1) or the alternative basic (2021 IBC Section 1605.2) load combinations. Load values include evaluation of anchor rod compression capacity and do not require further evaluation by the designer.
2. Allowable shear load are based on 2,000 lb. uniformly distributed axial load on the panel acting in combination with the allowable shear load.
3. Allowable shear, drift and anchor tension values may be interpolated for intermediate height or vertical loads. For panels 74½"-78" tall, use the values for a 78" tall panel.
4. High-strength anchor bolts are required unless a lower strength grade is justified by the registered design professional. See Figures 6 and 7 for WSWH-ABHS anchor bolt information and anchorage solutions.
5. Allowable shear loads assume a maximum first floor joist depth of 12". For allowable shear load with joists up to 16" deep, multiply table values by 0.92.
6. Drifts at lower design shear may be linearly reduced.
7. Tabulated anchor tension values assume no resisting vertical load. Anchor tension loads at design shear values and including the effect of vertical load may be determined using the following equation:

   $T = [(V \times H) / B] - P/2$, where:

   T = Anchor tension load (lb.)
   V = Design shear load (lb.)
   P = Applied vertical load (lb.)
   H = Panel height (in.)
   B = Moment arm (in.); 8.125" for WSWH12, 14" for WSWH18, 20" for WSWH24

TABLE 5—ALLOWABLE ASD IN-PLANE SHEAR AND BASE MOMENT FOR TWO-STORY STACKED APPLICATION STRONG-WALL HIGH STRENGTH WOOD SHEARWALL ON CONCRETE FOUNDATION

Table 5A—Strong-Wall High Strength Wood Shearwall Second-Story Walls — Stacked Application on Concrete Foundation

Second-Story Wall Models	Panel Evaluation Height, H_e (in.)	Seismic		Wind	
		Allowable ASD Shear, V (lb.)[5]	Drift at Allowable Shear, Δ (in.)	Allowable ASD Shear, V (lb.)[5]	Drift at Allowable Shear, Δ (in.)
WSWH12x7	78	600	0.34	765	0.43
WSWH18x7	78	1,495	0.34	1,895	0.43
WSWH24x7	78	2,780	0.31	3,635	0.43
WSWH12x8	93¼	490	0.42	620	0.53
WSWH18x8	93¼	1,215	0.42	1,545	0.53
WSWH24x8	93¼	2,365	0.42	3,000	0.53
WSWH12x9	105¼	410	0.46	525	0.60
WSWH18x9	105¼	1,095	0.44	1,420	0.60
WSWH24x9	105¼	2,045	0.43	2,665	0.60
WSWH12x10	117¼	360	0.53	455	0.67
WSWH18x10	117¼	895	0.53	1,135	0.67
WSWH24x10	117¼	1,735	0.53	2,205	0.67
WSWH12x11	129¼	315	0.56	400	0.73
WSWH18x11	129¼	790	0.57	1,005	0.73
WSWH24x11	129¼	1,540	0.57	1,955	0.73
WSWH12x12	144	260	0.61	335	0.80
WSWH18x12	144	665	0.63	845	0.80
WSWH24x12	144	1,295	0.63	1,645	0.80
WSWH18x13	156	605	0.68	770	0.87
WSWH24x13	156	1,175	0.68	1,495	0.87
WSWH18x14	168	545	0.74	690	0.93
WSWH24x14	168	1,055	0.74	1,345	0.93

1. Allowable base moment and anchor tension are applicable to installation on concrete foundations with minimum f'_c = 2,500 psi using the ASD basic (Section 1605.3.1) or the alternative basic (Section 1605.3.2) load combinations. Load values include evaluation of anchor rod compression at second story and bearing stresses at foundation.
2. Allowable shear, drift, and base moment values may be interpolated for intermediate heights.
3. Two-story stacked-wall installations may consist of any height-combination of equal width wall models listed in these tables.
4. Loads are based on a 2,000 lb. maximum uniformly distributed total axial load acting on the second-story panel and a 4,000 lb. maximum uniformly distributed total axial load acting on the first-story panel in combination with the tabulated shear load and base moment.
5. The allowable second-story shear loads assume a maximum floor joist depth of 18".
6. A two-story stacked connection kit (TSS) is required to attach the second-story panel to first-story panel.
7. The designer must verify that the cumulative overturning moment at the base of the first-story Strong-Wall High Strength Wood Shearwall does not exceed the allowable base moment capacity.
8. High-strength anchor bolts are required at the second-story wall unless a lower strength grade is justified by the registered design professional. See Figures 6 and 7 for WSWH-AB anchor bolt information and anchorage solutions.
9. High-strength anchor bolts are required at the first-story wall for anchor tension forces exceeding the allowable load for standard-strength bolts as shown in Figures 6 and 7. See Figures 6 and 7 for WSWH-AB anchor bolt information and anchorage solutions.

For **SI**: 1 inch = 25.4 mm, 1 lb. = 4.45 N.

Table 5B—Strong-Wall High Strength Wood Shearwall First-Story Walls — Stacked Application on Concrete Foundation

First-Story Wall Models	Panel Evaluation Height, H_e (in.)	Seismic			Wind		
		Allowable ASD Base Moment (lb.-ft.)	Drift at Allowable Base Moment (in.)	Anchor Tension at Allowable Base Moment (lb.)	Allowable ASD Base Moment (lb.-ft.)	Drift at Allowable Base Moment (in.)	Anchor Tension at Allowable Base Moment (lb.)
WSWH12x7	78	8,450	0.32	13,300	10,855	0.43	17,085
WSWH18x7	78	24,670	0.32	23,685	28,375	0.38	27,240
WSWH24x7	78	48,425	0.30	33,205	49,175	0.33	33,720
WSWH12x8	93¼	8,005	0.40	12,600	10,295	0.53	16,200
WSWH18x8	93¼	23,780	0.39	22,830	28,365	0.49	27,230
WSWH24x8	93¼	48,490	0.37	33,250	49,190	0.41	33,730
WSWH12x9	105¼	7,455	0.45	11,730	9,605	0.60	15,115
WSWH18x9	105¼	22,585	0.45	21,680	28,375	0.58	27,240
WSWH24x9	105¼	45,170	0.43	30,975	49,160	0.50	33,710
WSWH12x10	117¼	6,840	0.50	10,765	8,795	0.67	13,840
WSWH18x10	117¼	20,910	0.50	20,075	26,920	0.67	25,845
WSWH24x10	117¼	39,180	0.48	26,865	49,145	0.64	33,700
WSWH12x11	129¼	6,410	0.56	10,090	8,240	0.73	12,970
WSWH18x11	129¼	21,110	0.55	20,265	27,145	0.73	26,060
WSWH24x11	129¼	43,085	0.54	29,545	49,170	0.64	33,715
WSWH12x12	144	6,060	0.61	9,535	7,740	0.80	12,180
WSWH18x12	144	20,460	0.61	19,640	26,340	0.80	25,285
WSWH24x12	144	42,300	0.60	29,005	49,200	0.72	33,735
WSWH18x13	156	19,370	0.66	18,595	24,830	0.87	23,835
WSWH24x13	156	40,430	0.65	27,725	49,140	0.81	33,695
WSWH18x14	168	16,520	0.72	15,860	21,210	0.93	20,360
WSWH24x14	168	36,680	0.71	25,150	47,110	0.93	32,305

For **SI**: 1 inch = 25.4 mm, 1 lb. = 4.45 N, 1 lb-ft = 1.36 N-m.

TABLE 6—ALLOWABLE ASD OUT-OF-PLANE SHEAR FOR STRONG-WALL HIGH STRENGTH WOOD SHEARWALL (WSWH) ON CONCRETE FOUNDATION (PSF)

Panel Attachment	WSWH-TP Top Connection Fastening	Strong-Wall High Strength Wood Shearwall Model	Nominal Height of Shearwall (ft.)										
			7	8	9	10	11	12	13	14	16	18	20
Top Plates	Angled SDS Screws Omitted	WSWH12	N/A	N/A	85	75	70	35	N/A	N/A	N/A	N/A	N/A
		WSWH18	N/A	N/A	125	115	105	80	65	50	35	25	15
		WSWH24	N/A	N/A	120	110	100	80	65	50	35	25	15
	Angled SDS Screws Installed	WSWH12	420	290	205	145	95	35	N/A	N/A	N/A	N/A	N/A
		WSWH18	395	290	205	145	110	80	65	50	35	25	15
		WSWH24	370	290	205	145	110	80	65	50	35	25	15
Header	Angled SDS Screws Installed	WSWH12	330	205	150	110	85	45	N/A	N/A	N/A	N/A	N/A
		WSWH18	285	205	150	110	85	65	N/A	N/A	N/A	N/A	N/A
		WSWH24	215	180	150	110	85	65	N/A	N/A	N/A	N/A	N/A

For **SI**: 1 inch = 25.4 mm, 1 ft. = 305 mm, 1 lb. = 4.45 N, 1 psf = 47.88 Pa.

1. Loads shown are at ASD level in pounds per square foot with no further increase allowed.
2. Loads consider a maximum deflection limit of h / 240.
3. Allowable out-of-plane loads can be applied in combination with the allowable vertical loads listed in Tables 2 and 3.
4. Allowable values for header panel attachment assume a maximum header depth of 12". Use a load reduction factor of 0.94, 0.88 and 0.82 for 14", 16" and 18" deep headers respectively.
5. Allowable values shown for header panel attachment require the use of the portal kit to resist header rotation.
6. Angled SDS screws may be omitted for WSWH panels taller than 100" in standard applications; however, SWS16150 screws must be installed for all fastening conditions as shown in Figure 2. When angels SDS screws are omitted, a reduced allowable out-of-plane load may apply.

TABLE 7—ALLOWABLE ASD VERTICAL LOADS FOR STRONG-WALL HIGH STRENGTH WOOD SHEARWALL (WSWH) ON CONCRETE FOUNDATION (LB.)

Strong-Wall High Strength Wood Shearwall Model	Nominal Height of Shearwall (ft.)										
	7	8	9	10	11	12	13	14	16	18	20
WSWH12	30,700	22,400	17,900	14,600	12,100	9,800	N/A	N/A	N/A	N/A	N/A
WSWH18	53,500	39,100	31,200	25,400	21,000	17,000	14,500	12,600	9,600	7,600	6,200
WSWH24	72,000	56,100	44,700	36,400	30,200	24,400	20,900	18,000	13,900	11,000	8,900

For **SI**: 1 inch = 25.4 mm, 1 ft. = 305 mm, 1 lb. = 4.45 N.

1. Allowable ASD vertical load is the lesser of the WSWH panel buckling capacity and concrete bearing capacity beneath the hold-downs assuming a minimum specified concrete compressive strength f'_c = 2,500 psi. No further increase for duration of load is allowed.
2. Allowable vertical loads assume concentric point load or uniformly distributed load without lateral loads present. For combined lateral and vertical loads, see Tables 2 and 3.
3. Tabulated loads apply to single-story panels on concrete foundations.

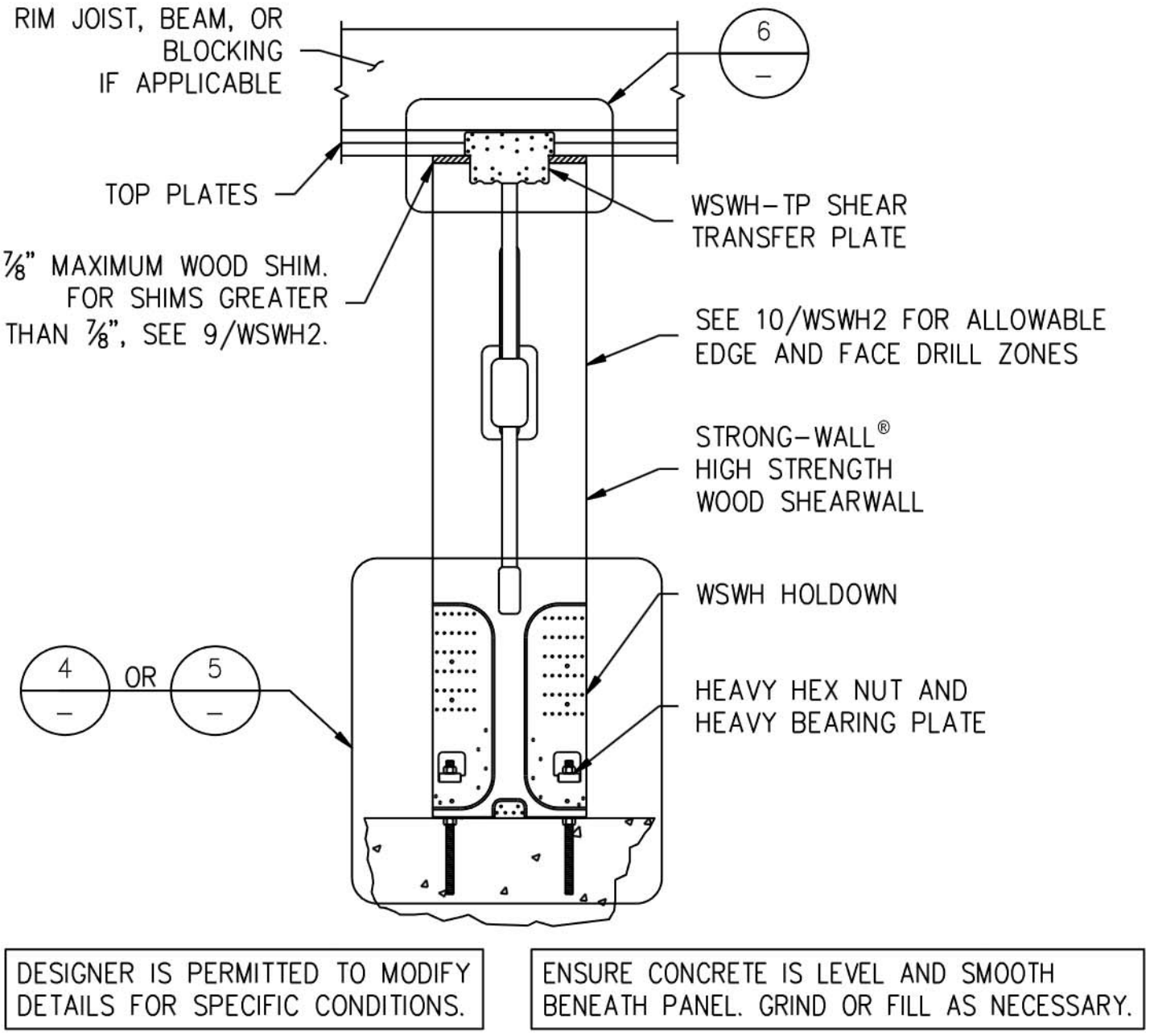

2/WSWH2—SINGLE-STORY WSWH ON CONCRETE

FIGURE 1—STRONG-WALL HIGH STRENGTH WOOD SHEARWALL DETAILS (2/WSWH2)

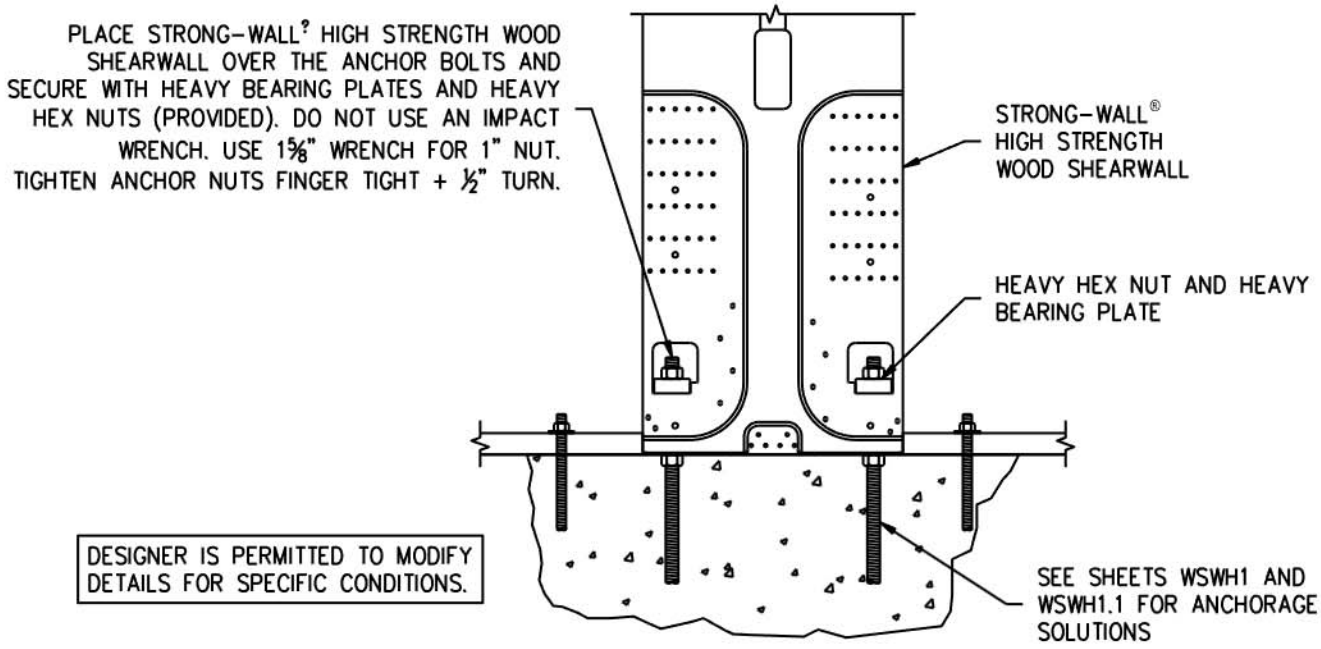

4/WSWH2—STANDARD INSTALLATION BASE CONNECTION

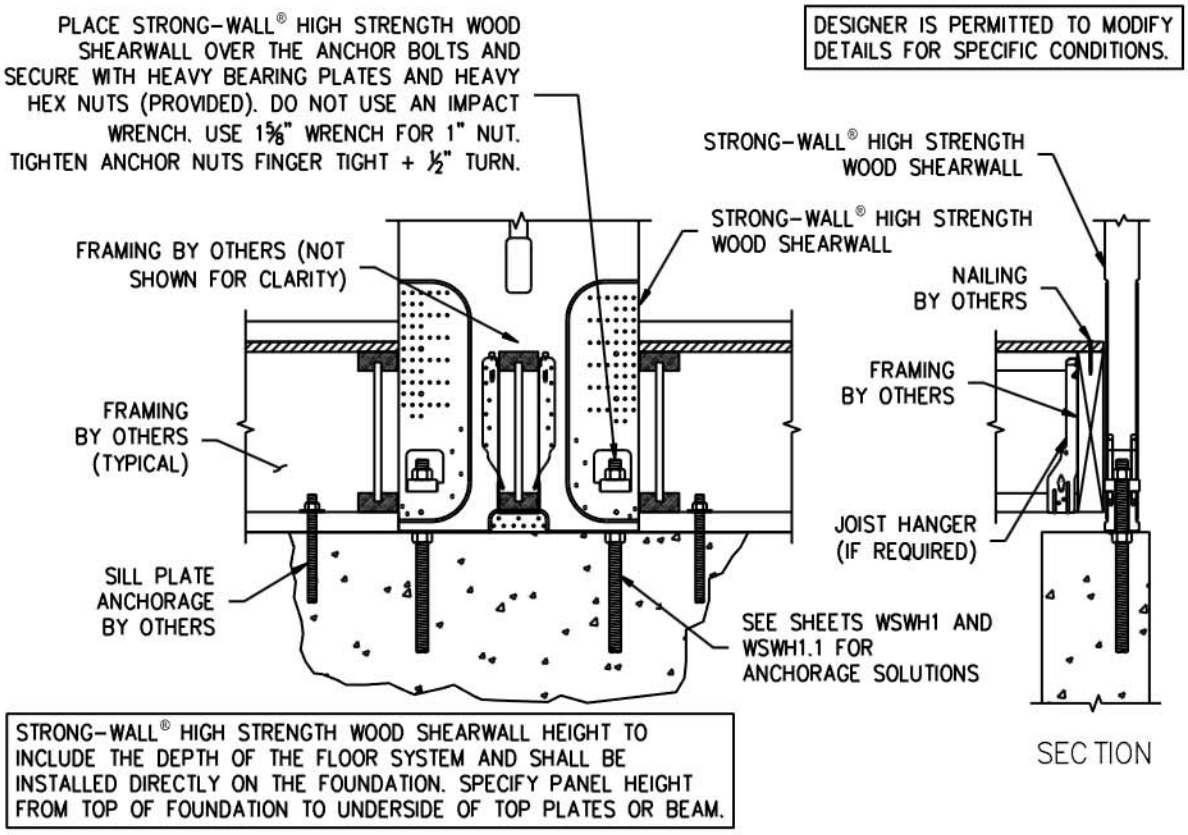

5/WSWH2—WOOD FLOOR SYSTEM BASE CONNECTION

FIGURE 1—STRONG-WALL HIGH STRENGTH WOOD SHEARWALL DETAILS (Continued) (4, 5/WSWH2)

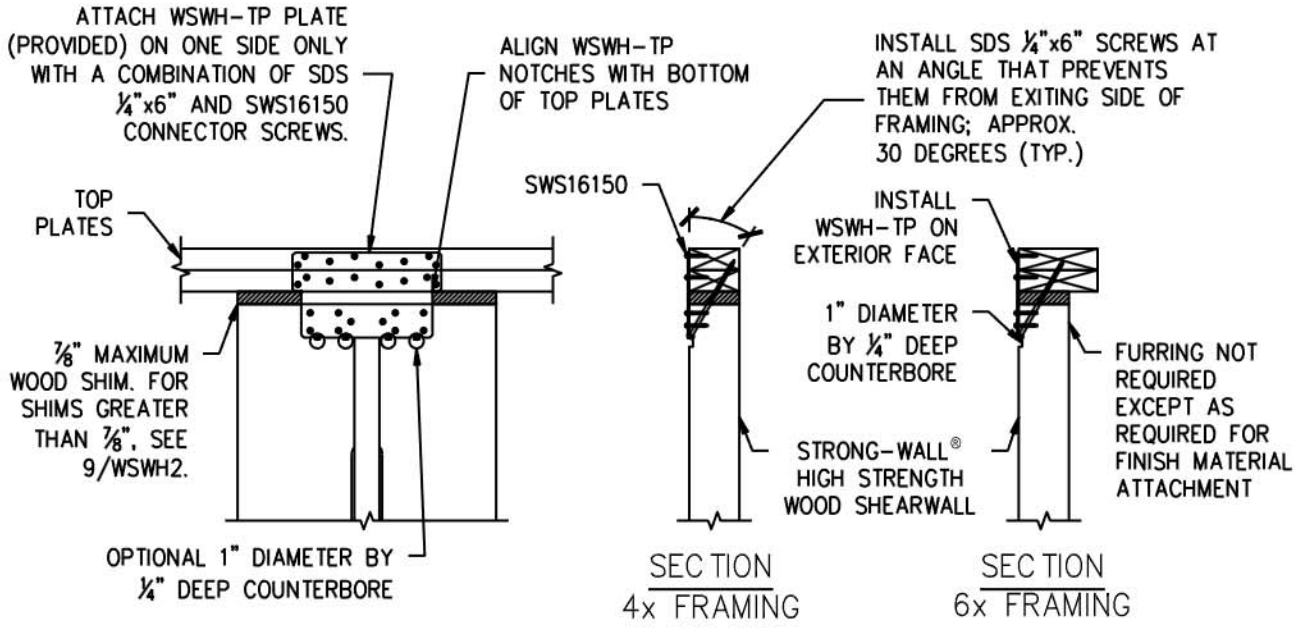

DESIGNER IS PERMITTED TO MODIFY DETAILS FOR SPECIFIC CONDITIONS.

WSWH-TP CONNECTION		
MODEL NO.	FASTENER QUANTITY	
	SWS16150	SDS25600
WSWH-TP12	14	2
WSWH-TP18	26	4
WSWH-TP24	46	8

6/WSWH2—TOP CONNECTION

FIGURE 2—STRONG-WALL HIGH STRENGTH WOOD SHEARWALL TOP CONNECTION DETAILS (6/WSWH2)

WSWH-TP CONNECTION		
MODEL NO.	FASTENER QUANTITY	
	SWS16150	SDS25600
WSWH-TP12	28	4
WSWH-TP18	52	8
WSWH-TP24	92	16

DESIGNER IS PERMITTED TO MODIFY DETAILS FOR SPECIFIC CONDITIONS.

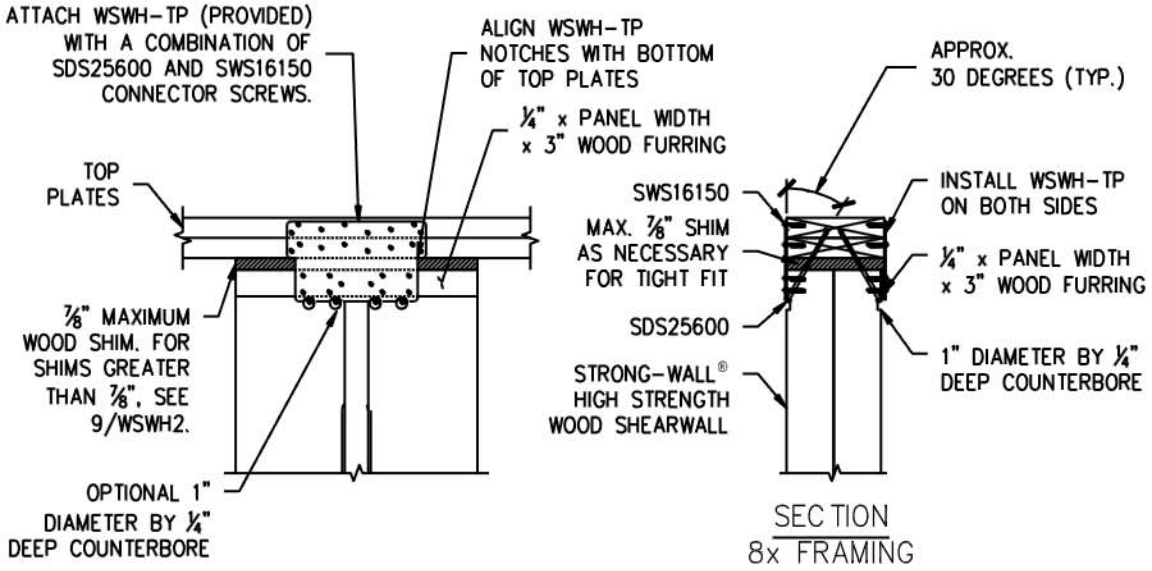

7/WSWH2—BACK-TO-BACK TOP CONNECTION

FIGURE 2—STRONG-WALL HIGH STRENGTH WOOD SHEARWALL TOP CONNECTION DETAILS (7/WSWH2)

EDGE DISTANCE FOR SCREWS		
SLOPE	A (in.)	B (in.)
0:12–4:12	2	3
5:12–8:12	1½	4½
9:12–12:12	1½	5½

QTY. OF SDS¼"x6" SCREWS REQ'D.	
WSWH12	4
WSWH18	8
WSWH24	16

DESIGNER IS PERMITTED TO MODIFY DETAILS FOR SPECIFIC CONDITIONS.

NOTES :
1. MAINTAIN END DISTANCES TO PREVENT SCREWS FROM PENETRATING THROUGH THE OUTER EDGES.
2. INSTALL SCREWS PERPENDICULAR TO THE TOP PLATE.
3. EDGE DISTANCES ASSUME DOUBLE TOP PLATE.

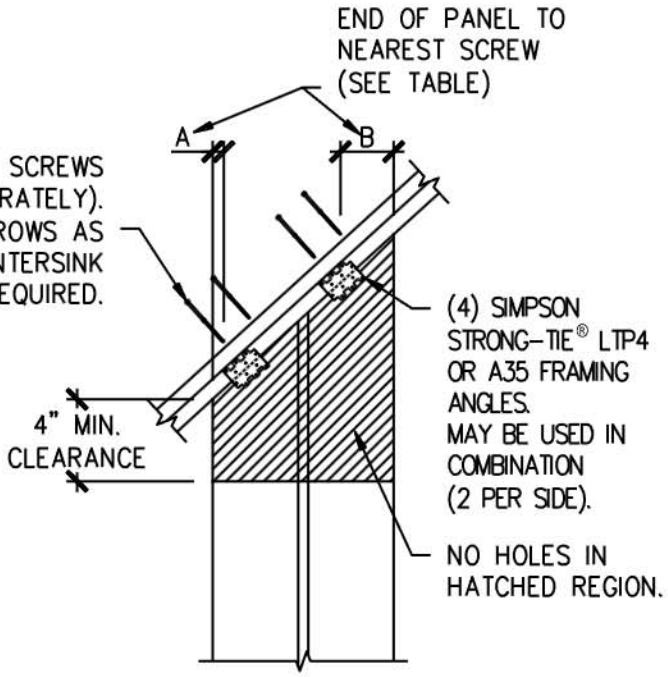

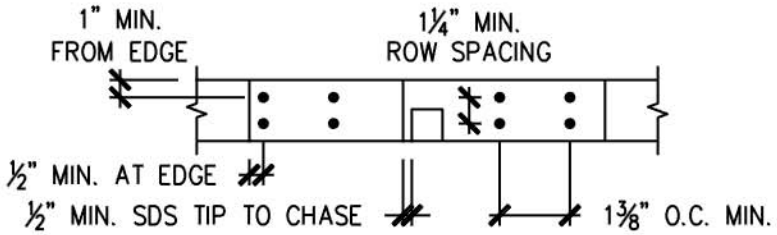

PLAN VIEW
SDS SCREW SPACING

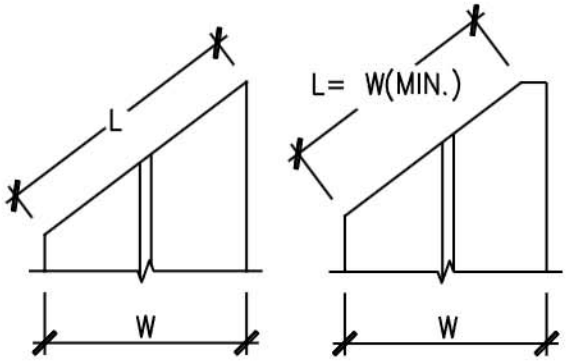

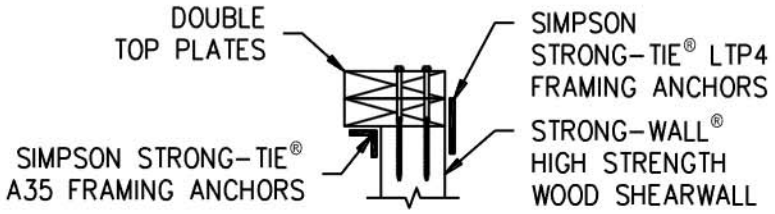

SECTION VIEW
2X6 OR WIDER FRAMING

INSTALLATION NOTES :
1. ACTUAL CUT LENGTH (L) MUST BE GREATER THAN OR EQUAL TO PANEL WIDTH (W).
2. THIS DETAIL APPLICABLE FOR SLOPES UP TO 12:12.
3. PANELS TALLER THAN 12' MUST BE DESIGNED FOR THE APPLICATION.

8/WSWH2—RAKE WALL

FIGURE 2—STRONG-WALL HIGH STRENGTH WOOD SHEARWALL TOP CONNECTION DETAILS (Continued) (8/WSWH2)

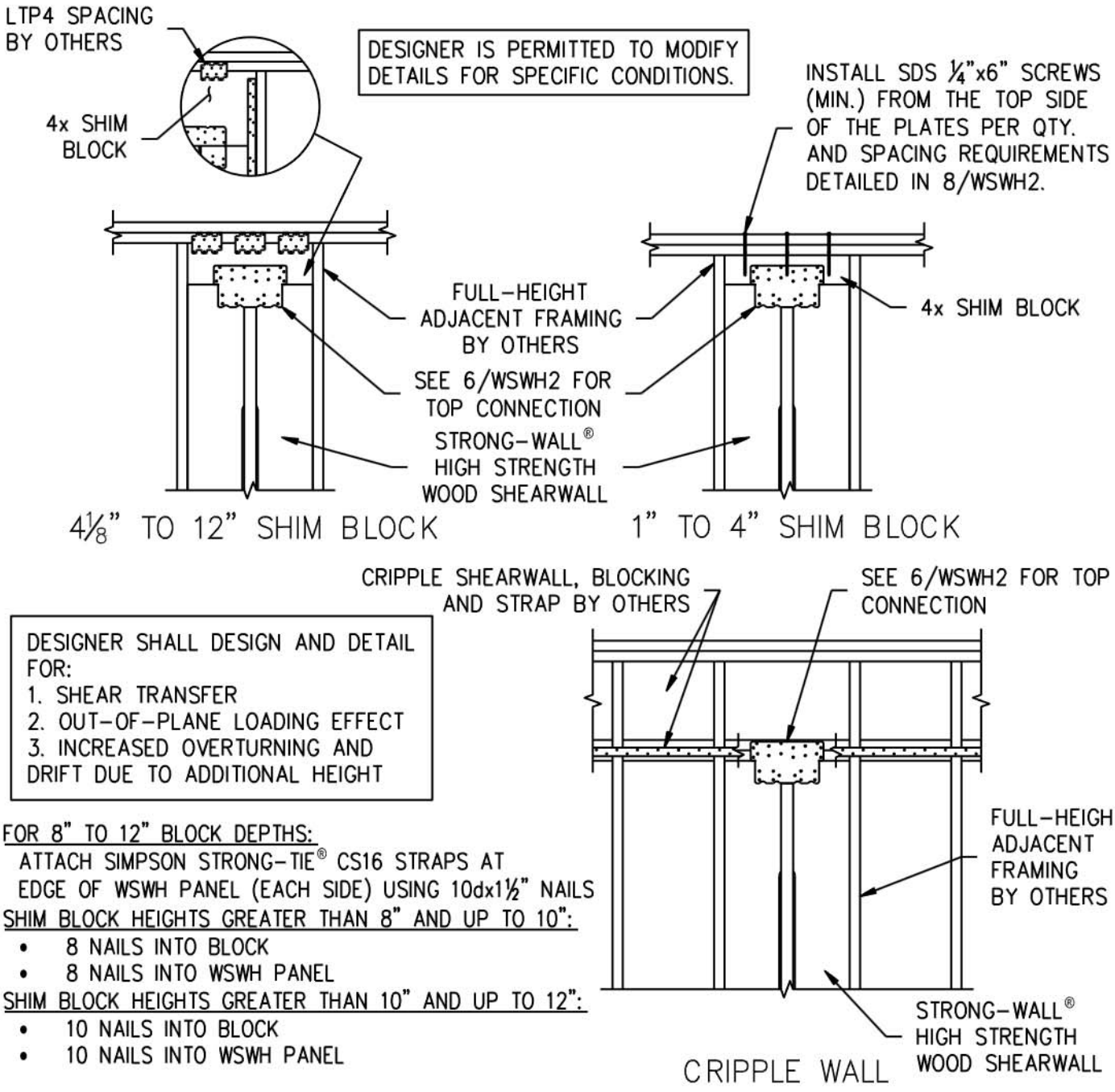

9/WSWH2—TOP OF WALL HEIGHT ADJUSTMENTS

FIGURE 2—STRONG-WALL HIGH STRENGTH WOOD SHEARWALL TOP CONNECTION DETAILS (Continued) (9/WSWH2)

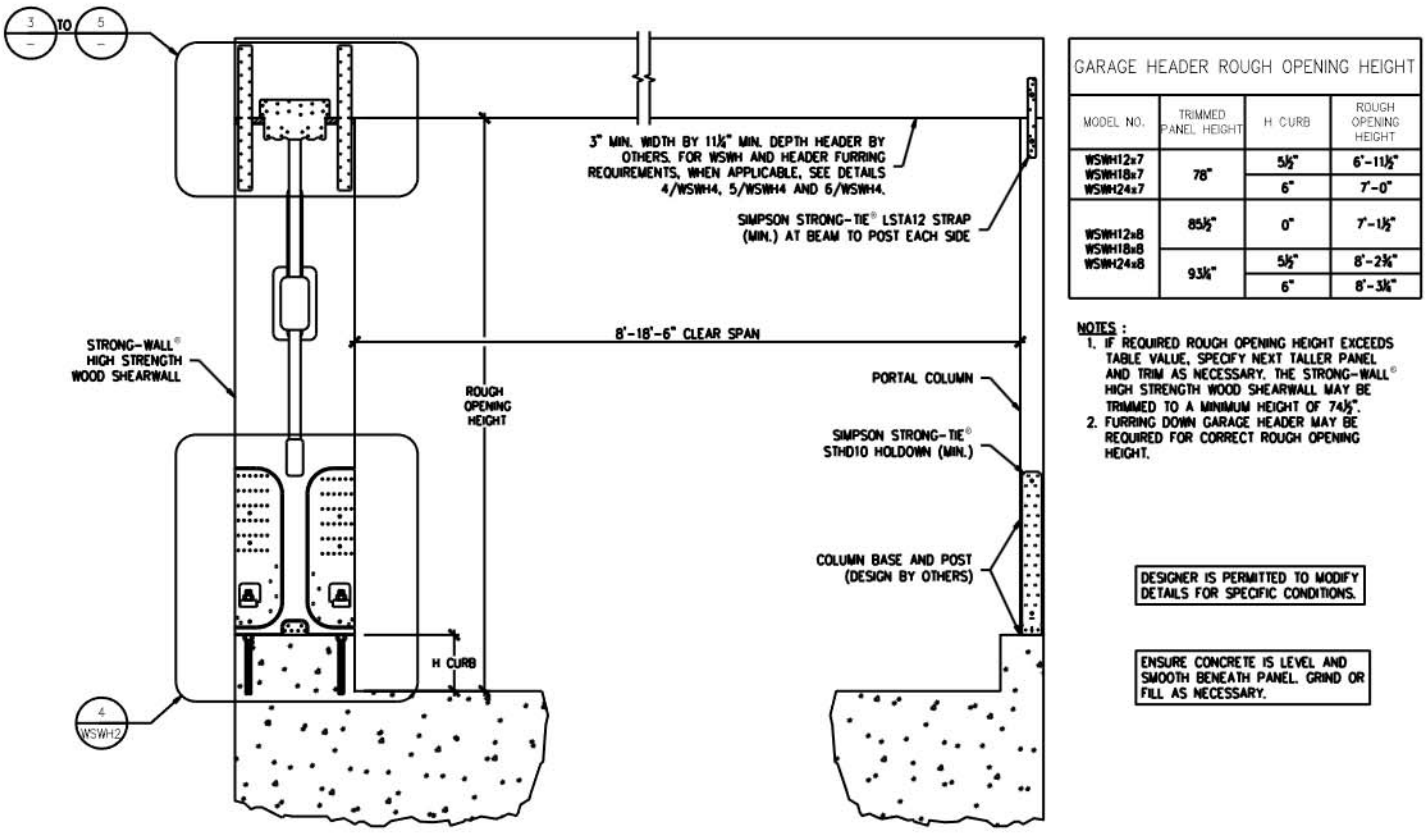

1/WSWH4—STRONG-WALL HIGH STRENGTH WOOD SHEARWALL SINGLE-PORTAL ASSEMBLY

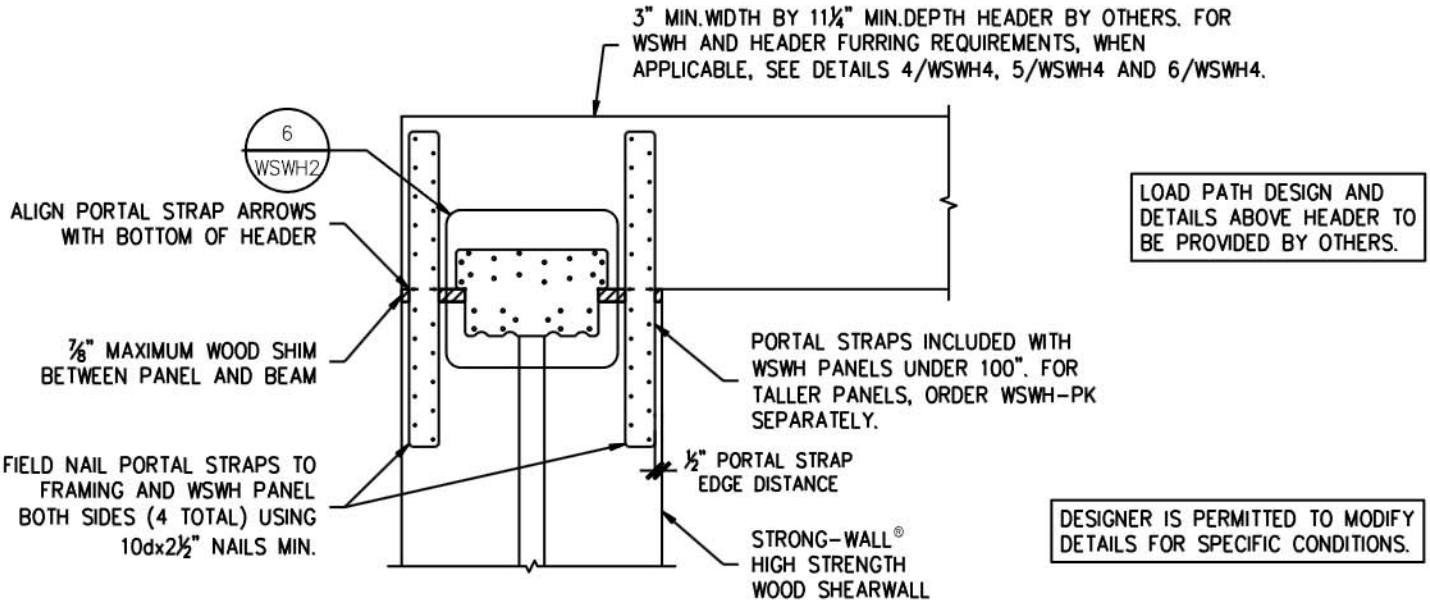

3/WSWH4—PORTAL TOP CONNECTION

FIGURE 3—STRONG-WALL HIGH STRENGTH WOOD SHEARWALL GARAGE FRONT DETAILS (1, 3/WSWH4)

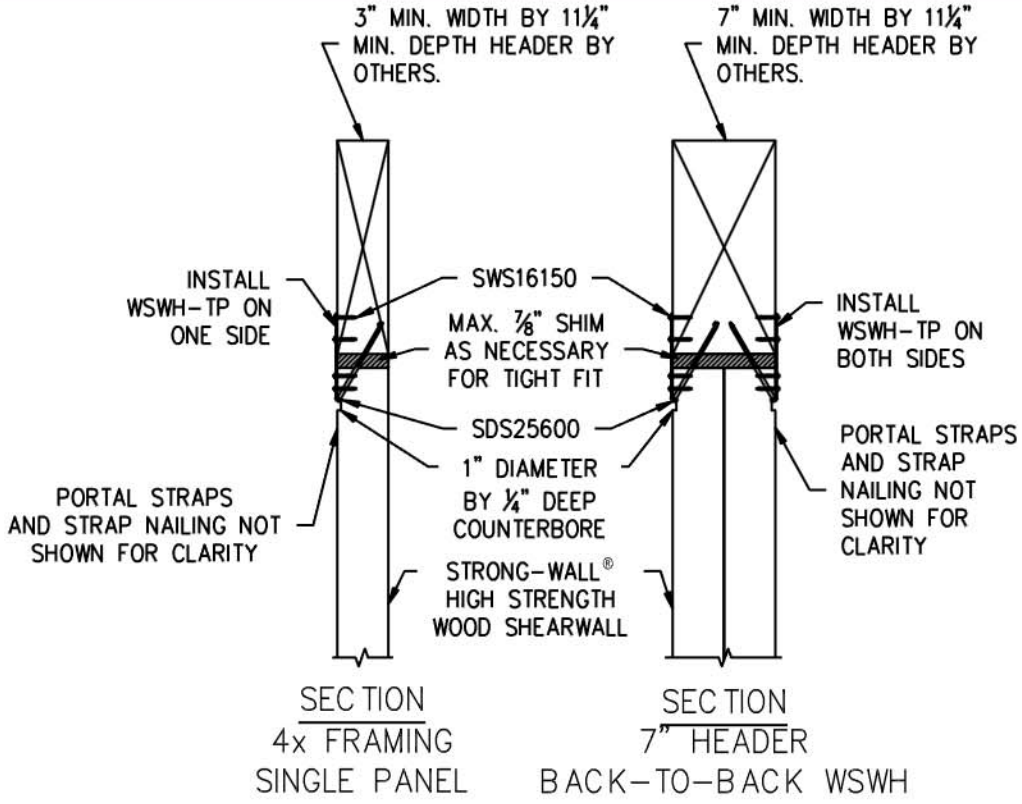

3/WSWH4—PORTAL SINGLE PANEL AND BACK-TO-BACK TOP CONNECTION

FIGURE 3—STRONG-WALL HIGH STRENGTH WOOD SHEARWALL GARAGE FRONT DETAILS (Continued) (3/WSWH4)

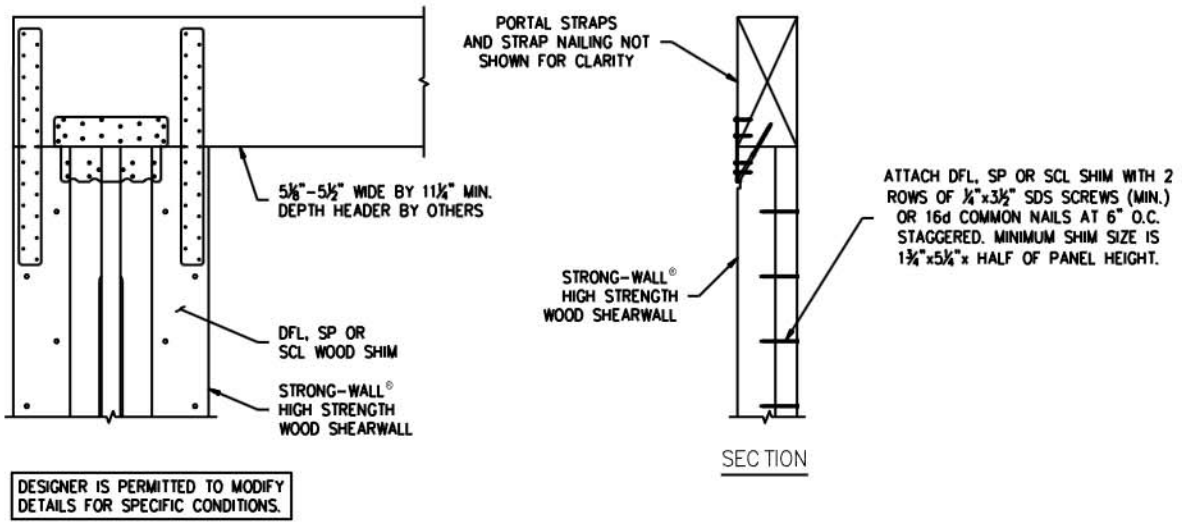

4/WSWH4—FURRING FOR $5^1/_8$" TO $5^1/_2$" HEADER

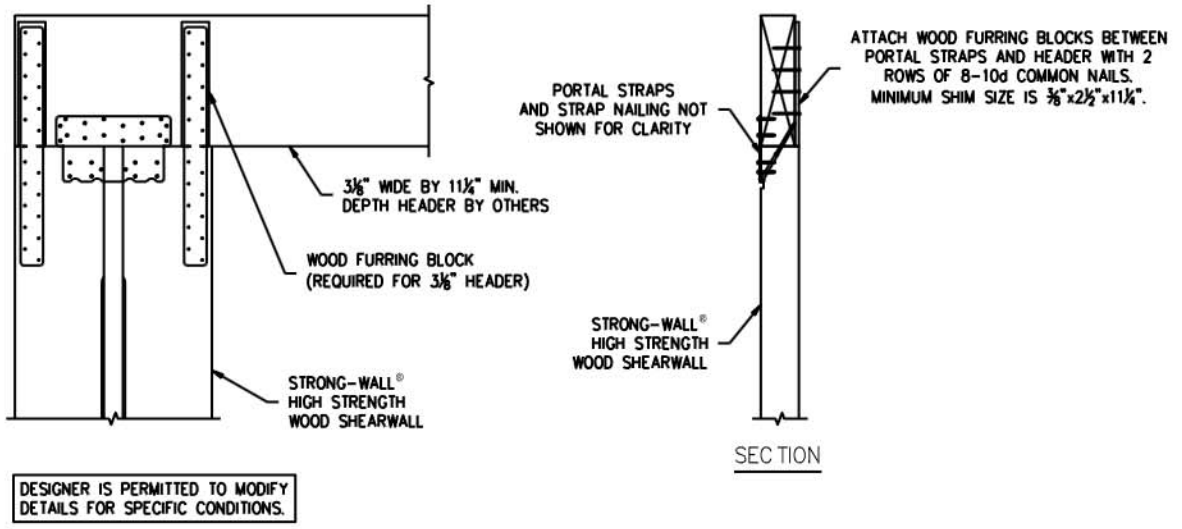

5/WSWH4—FURRING FOR $3^1/_8$" HEADER

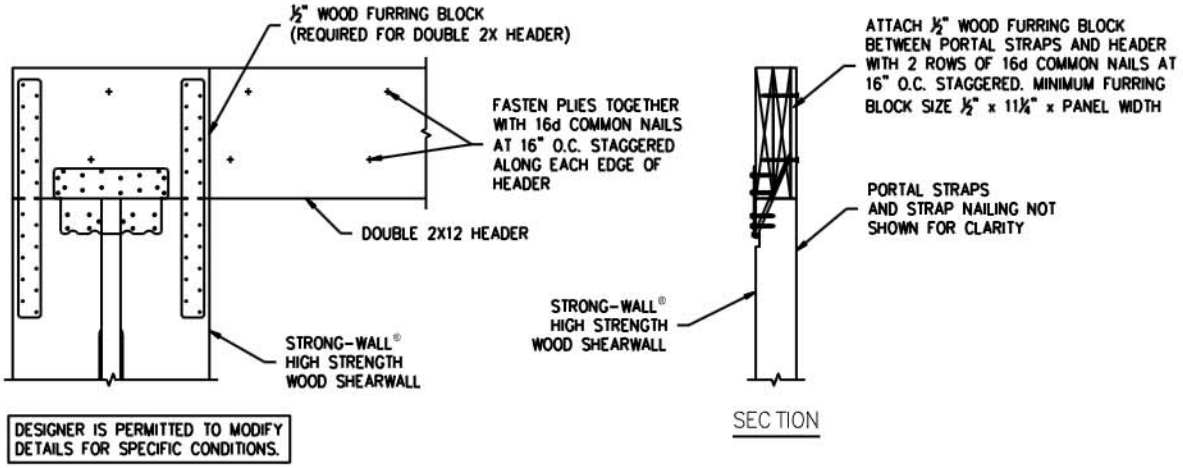

6/WSWH4—FURRING FOR DOUBLE 2X12 HEADER

FIGURE 3—STRONG-WALL HIGH STRENGTH WOOD SHEARWALL GARAGE FRONT DETAILS (Continued) (4, 5, 6/WSWH4)

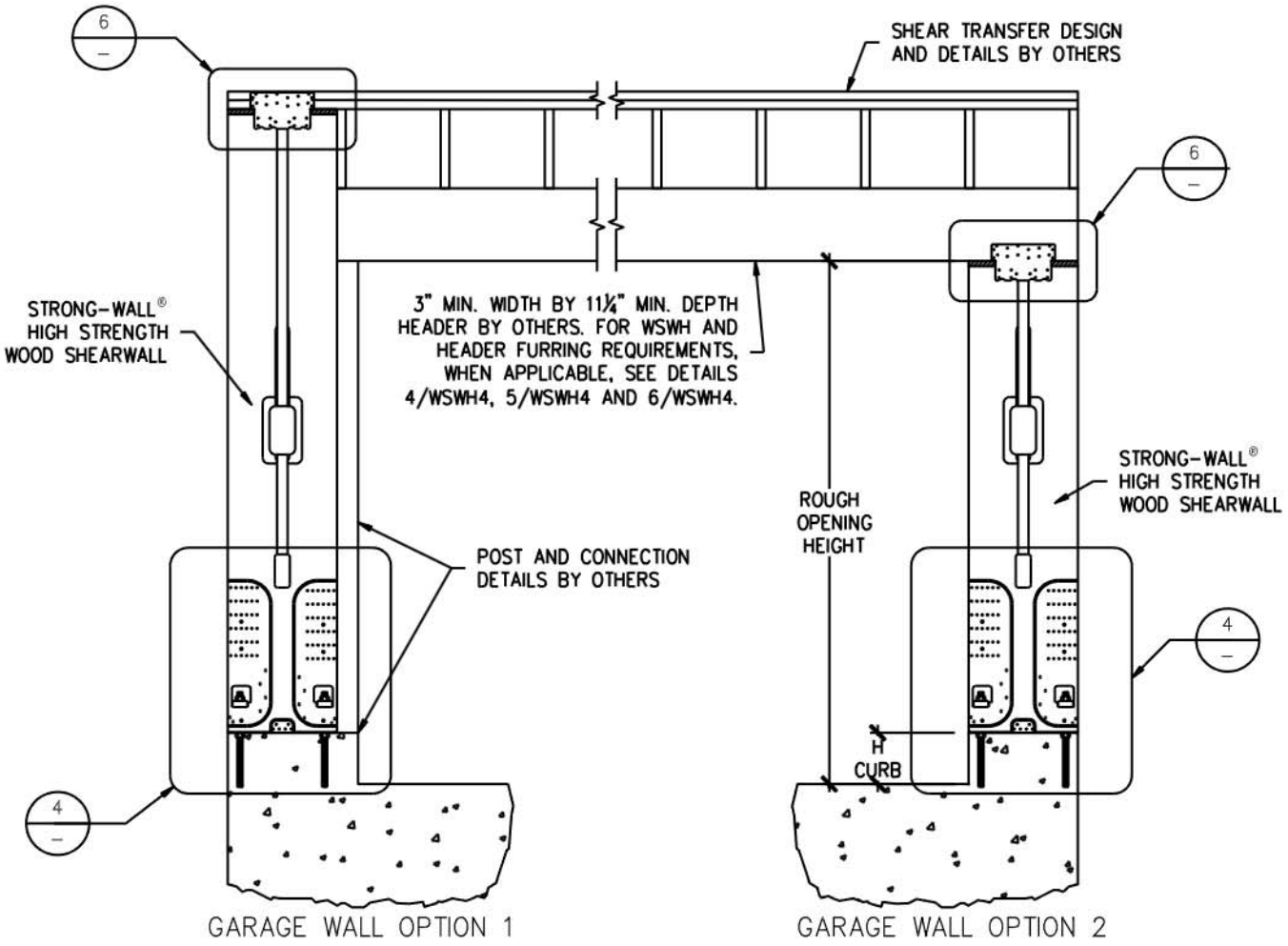

GARAGE HEADER ROUGH OPENING HEIGHT			
MODEL NO.	TRIMMED PANEL HEIGHT	H CURB	ROUGH OPENING HEIGHT
WSWH12x7 WSWH18x7 WSWH24x7	78"	5½"	6'-11½"
		6"	7'-0"
WSWH12x8 WSWH18x8 WSWH24x8	85½"	0"	7'-1½"
	93¼"	5½"	8'-2¾"
		6"	8'-3¼"

NOTES :
1. IF REQUIRED ROUGH OPENING HEIGHT EXCEEDS TABLE VALUE, SPECIFY NEXT TALLER PANEL AND TRIM AS NECESSARY. THE STRONG-WALL® HIGH STRENGTH WOOD SHEARWALL MAY BE TRIMMED TO A MINIMUM HEIGHT OF 74½".
2. FURRING DOWN GARAGE HEADER MAY BE REQUIRED FOR CORRECT ROUGH OPENING HEIGHT.

FOR GARAGE WALL OPTION 2, DESIGNER SHALL DESIGN AND DETAIL FOR:
1. SHEAR TRANSFER
2. OUT-OF-PLANE LOADING EFFECT
3. INCREASED OVERTURNING AND DRIFT DUE TO ADDITIONAL HEIGHT

WHEN WSWH-PS STRAPS OMITTED, ALLOWABLE SHEAR VALUES FOR STANDARD PANEL APPLY.

DESIGNER IS PERMITTED TO MODIFY DETAILS FOR SPECIFIC CONDITIONS.

3/WSWH2—ALTERNATE WSWH GARAGE FRONT OPTIONS

FIGURE 3—STRONG-WALL HIGH STRENGTH WOOD SHEARWALL GARAGE FRONT DETAILS (Continued) (3/WSWH2)

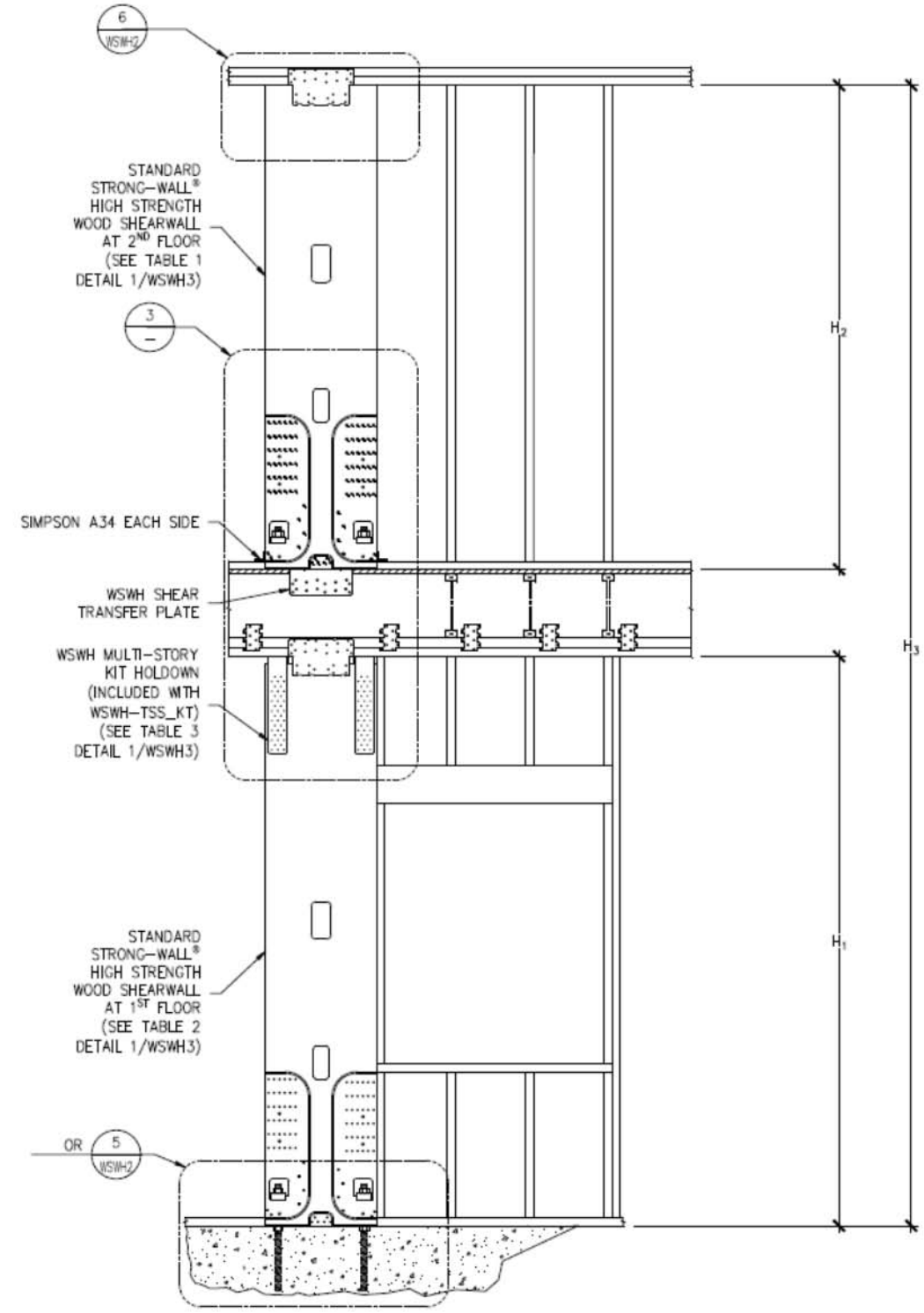

NOTE:
1. 1ST STORY WSWH MUST BE THE SAME WIDTH AS THE 2ND STORY WSWH.

DESIGNER IS PERMITTED TO MODIFY DETAILS FOR SPECIFIC CONDITIONS.

LEGEND :
- H_1 = 1ST STORY WSWH HEIGHT; TOP OF CONCRETE TO UNDERSIDE OF 1ST STORY TOP PLATES (IN.)
- H_2 = 2ND STORY WSWH HEIGHT; TOP OF FLOOR SHEATHING TO UNDERSIDE OF 2ND STORY TOP PLATES (IN.)
- H_3 = TOTAL ASSEMBLY HEIGHT; TOP OF CONCRETE TO UNDERSIDE OF 2ND STORY TOP PLATES (IN.)

2/WSWH3 – TWO-STORY STACKED

FIGURE 4 – STRONG-WALL HIGH STRENGTH WOOD SHEARWALL FIRST FLOOR WALL AND TWO-STORY STACKED DETAILS (2/WSWH3)

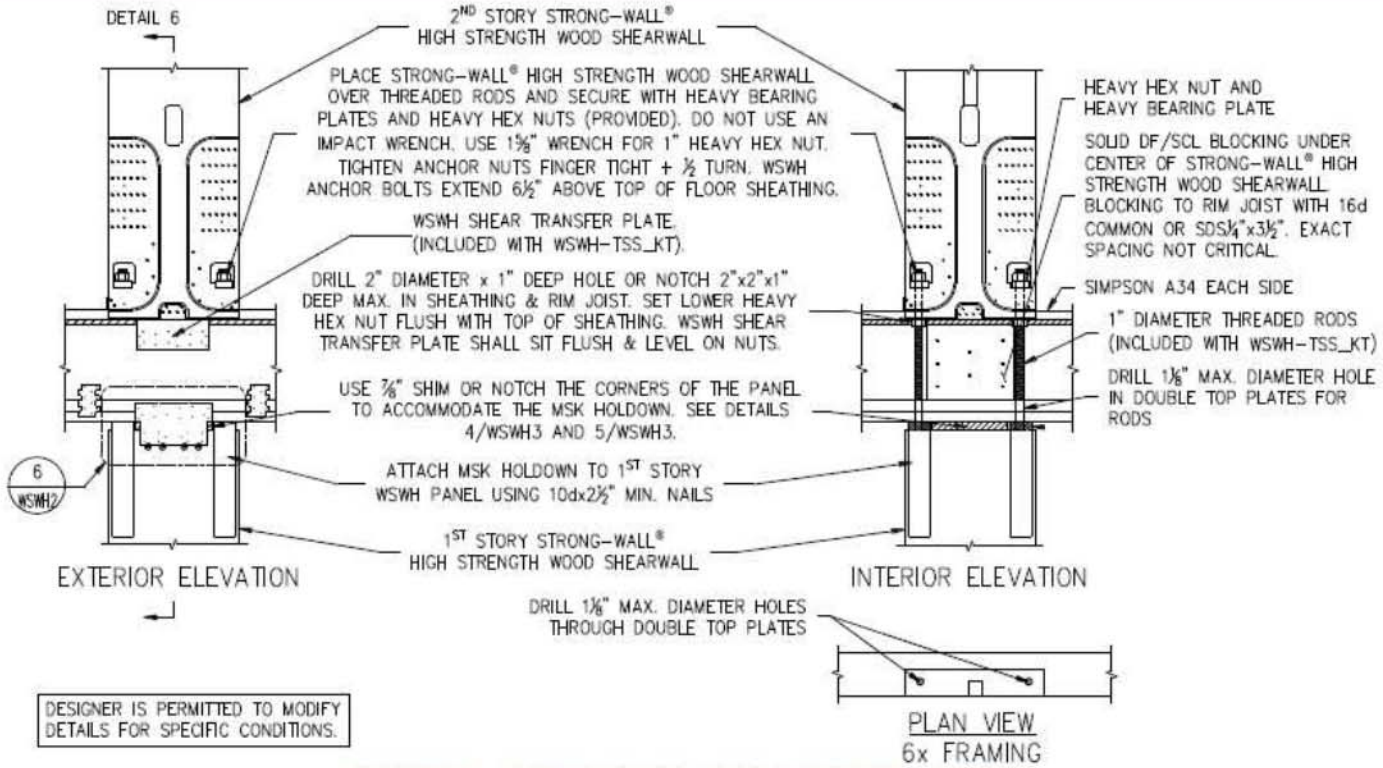

3/WSWH3 – TWO-STORY STACKED FLOOR FRAMING

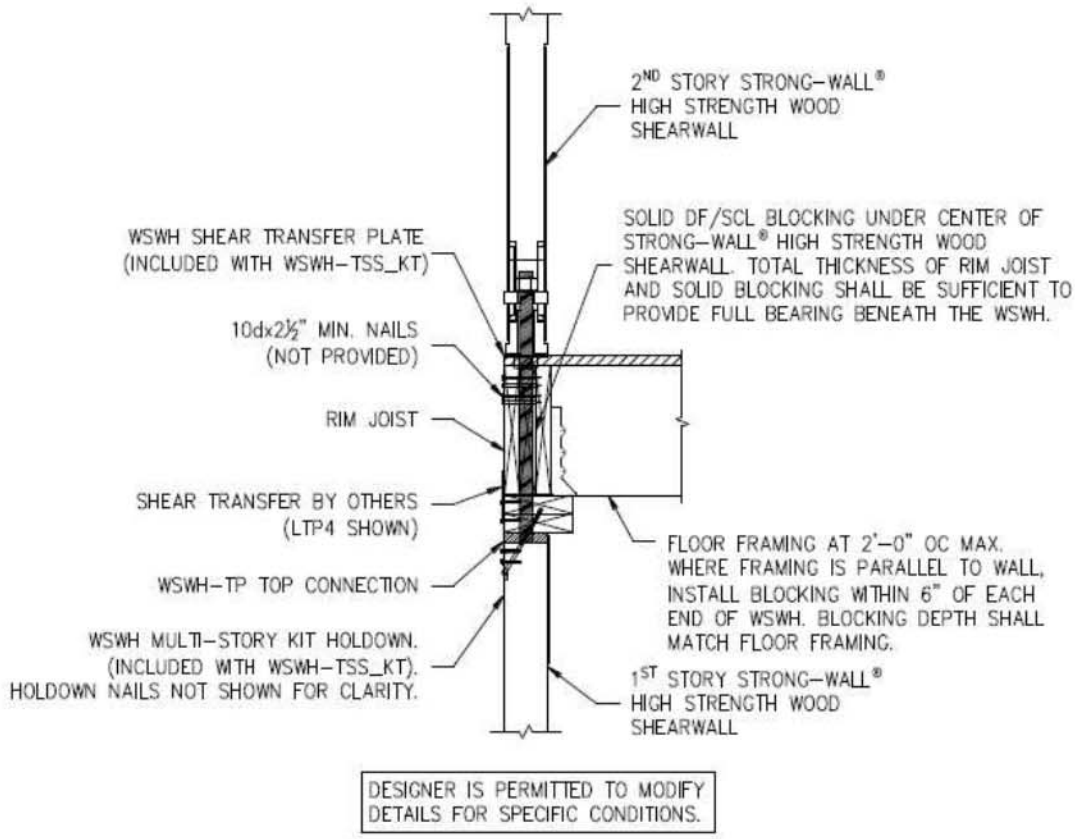

6/WSWH3 – TWO-STORY STACKED FLOOR SECTION

FIGURE 4 – STRONG-WALL HIGH STRENGTH WOOD SHEARWALL FIRST FLOOR WALL AND TWO-STORY STACKED DETAILS (Continued) (3, 6/WSWH3)

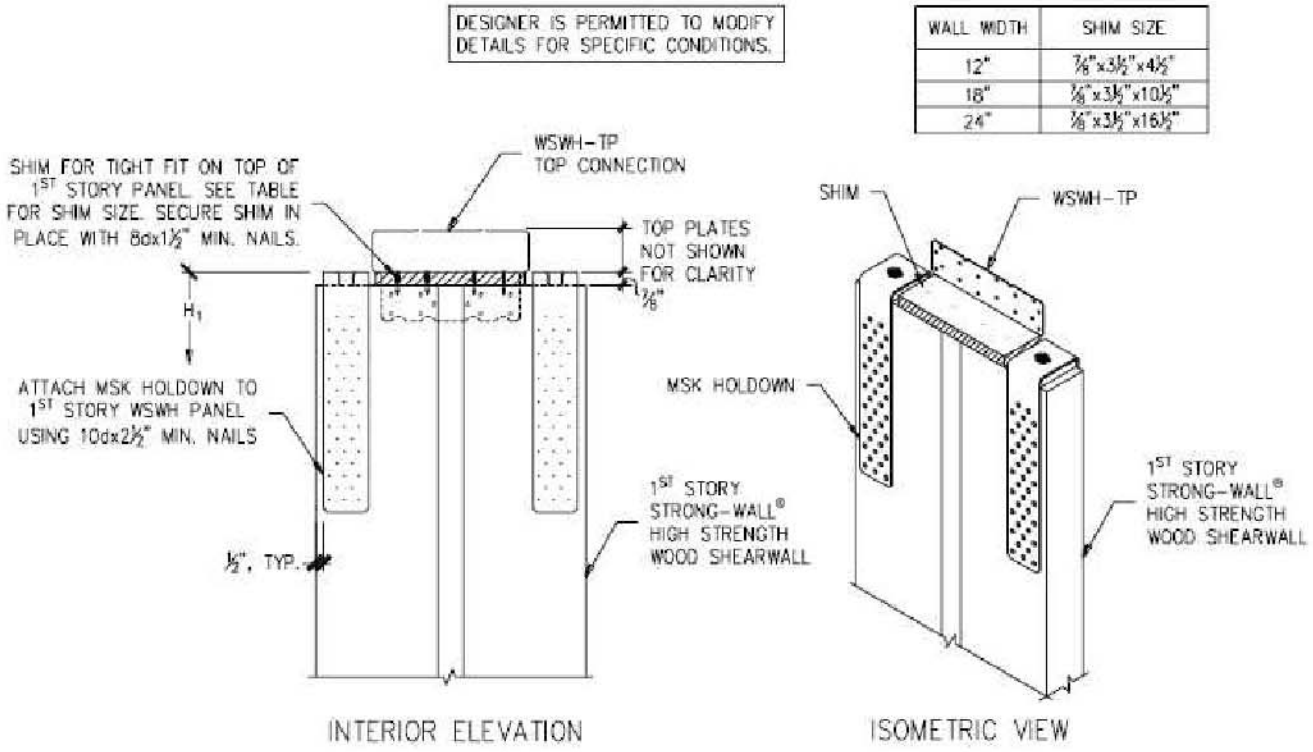

4/WSWH3 – TOP OF 1ST STORY PANEL CONNECTION

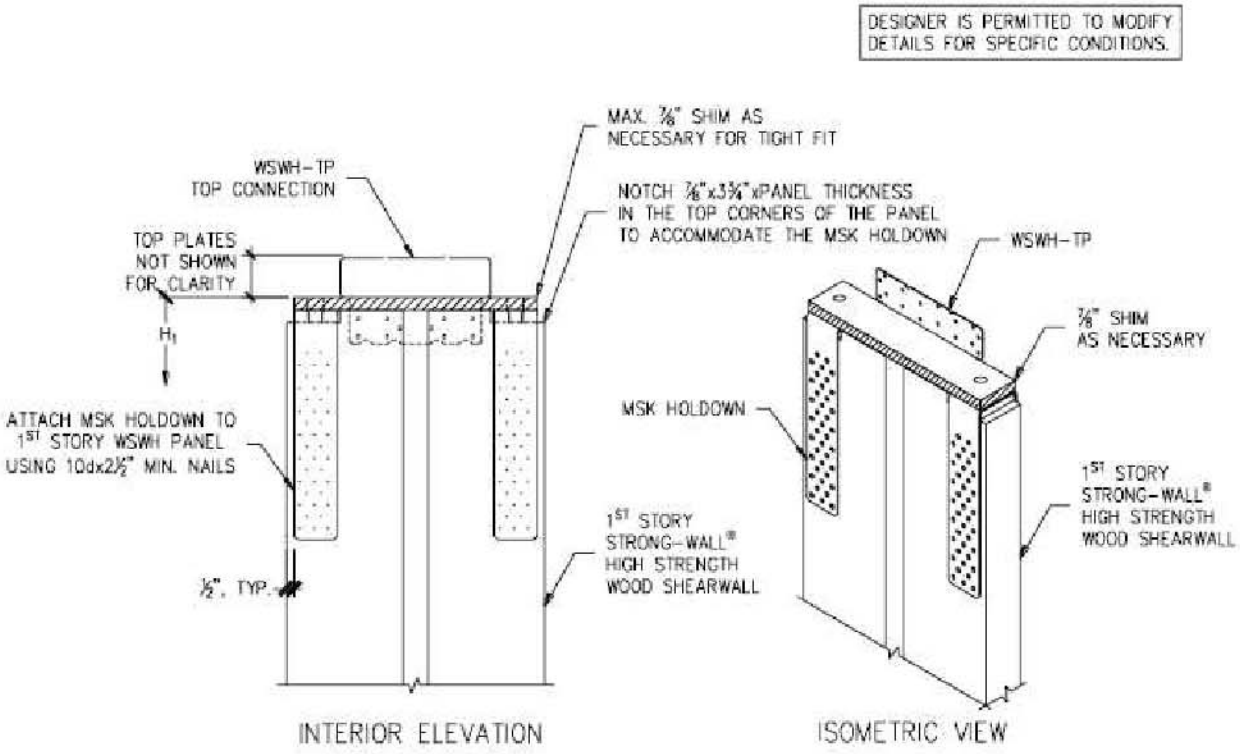

5/WSWH3 – ALTERNATIVE TOP OF 1ST STORY PANEL CONNECTION

FIGURE 4 – STRONG-WALL HIGH STRENGTH WOOD SHEARWALL FIRST FLOOR WALL AND TWO-STORY STACKED DETAILS (Continued) (4, 5/WSWH3)

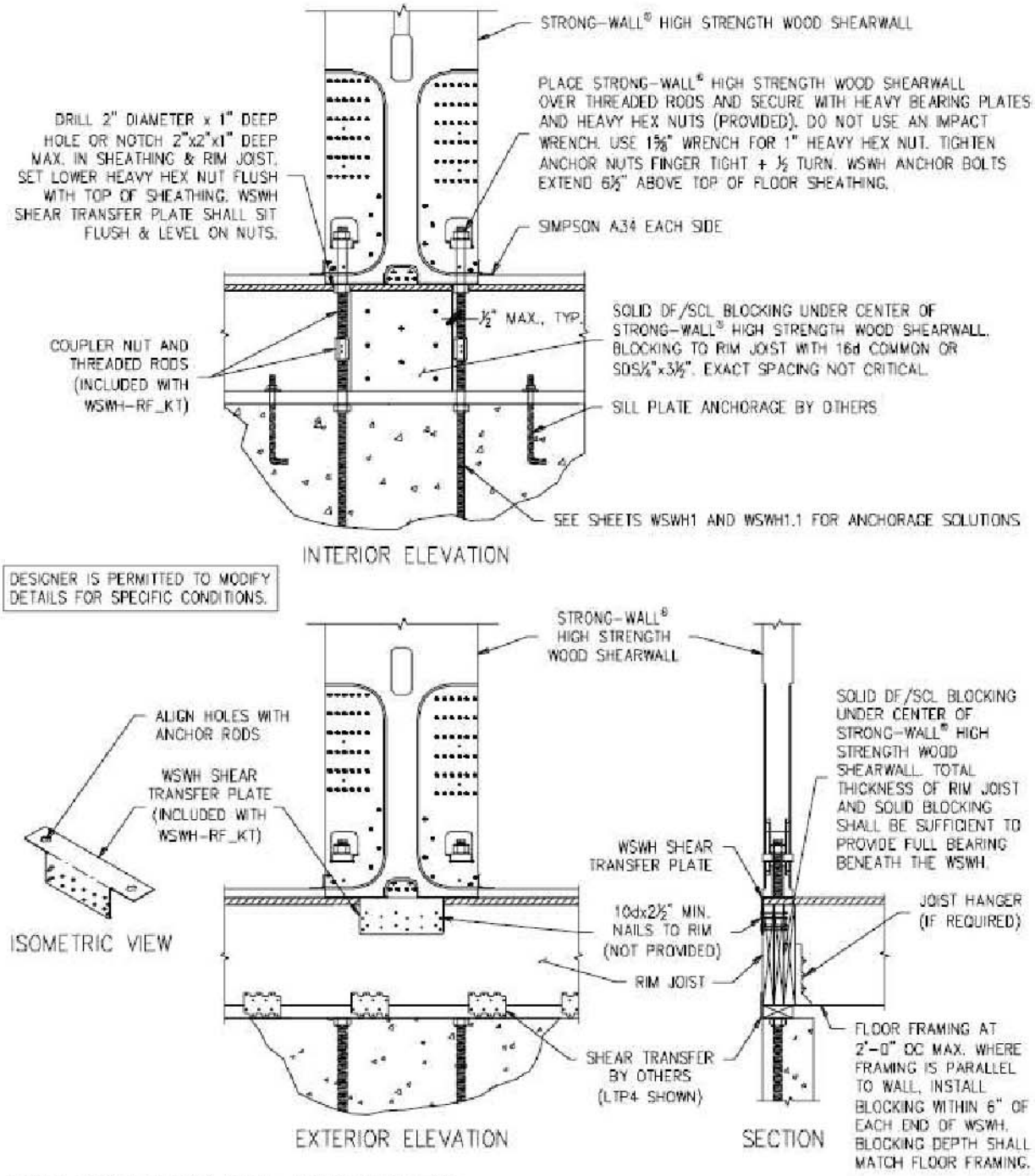

WOOD FIRST-FLOOR WALL CONNECTION KIT

WALL WIDTH (in.)	MODEL NO.	CONTENTS
12	WSWH-RF12KT	EACH KIT CONTAINS: (1) SHEAR TRANSFER PLATE (2) 1" x 18" THREADED RODS (ASTM A193 B7) (2) COUPLER NUTS (2) HEAVY HEX NUTS INSTALLATION INSTRUCTIONS
18	WSWH-RF18KT	
24	WSWH-RF24KT	

ORDER FIRST FLOOR CONNECTION KIT SEPARATELY.
MODEL WSWH-RF_KT. EXAMPLE WSWH-RF18KT

FIRST FLOOR AT WOOD FRAMING NOTES :
1. USE WOOD FIRST-FLOOR ALLOWABLE LOAD TABLES FROM THE STRONG-WALL CATALOG FOR THIS INSTALLATION.
2. USE ALTERNATE DETAIL 5/WSWH2 TO ACHIEVE MAXIMUM ON-CONCRETE ALLOWABLE LOADS.
3. FOR TWO-STORY STACKED STRONG-WALL HIGH STRENGTH WOOD SHEARWALLS WITH WOOD FIRST FLOOR, USE ALTERNATE DETAIL 5/WSWH2.
4. DESIGNER SHALL DESIGN FOR SHEAR TRANSFER FROM RIM JOIST TO SILL PLATE AND SILL PLATE TO FOUNDATION.

7/WSWH3 – FIRST FLOOR AT WOOD FRAMING

FIGURE 4 – STRONG-WALL HIGH STRENGTH WOOD SHEARWALL FIRST FLOOR WALL AND TWO-STORY STACKED DETAILS (Continued) (7/WSWH3)

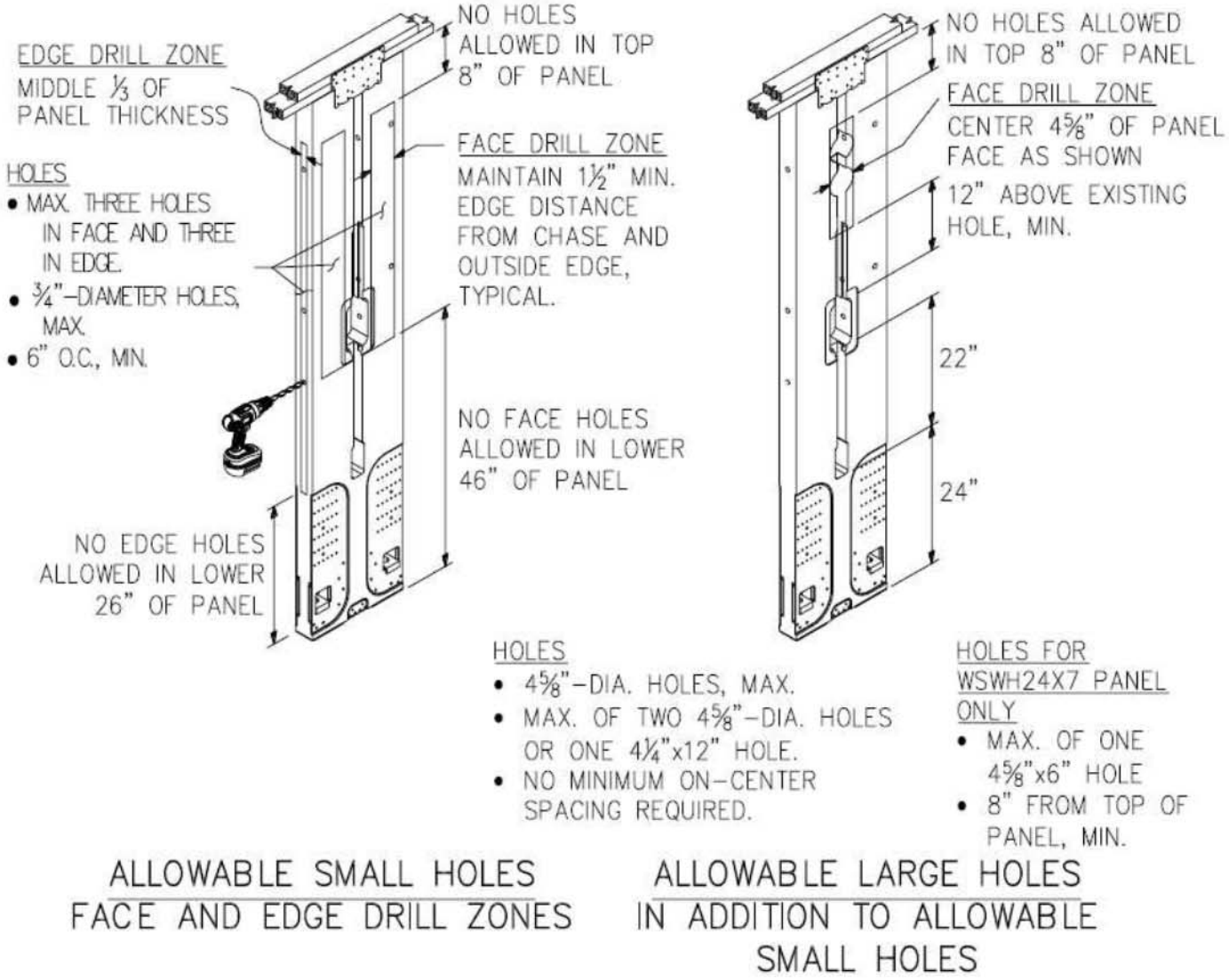

10/WSWH2 – TRIM ZONES AND ALLOWABLE HOLES

FIGURE 5 – STRONG-WALL HIGH STRENGTH WOOD SHEARWALL HOLE PLACEMENT DETAILS (10/WSWH2)

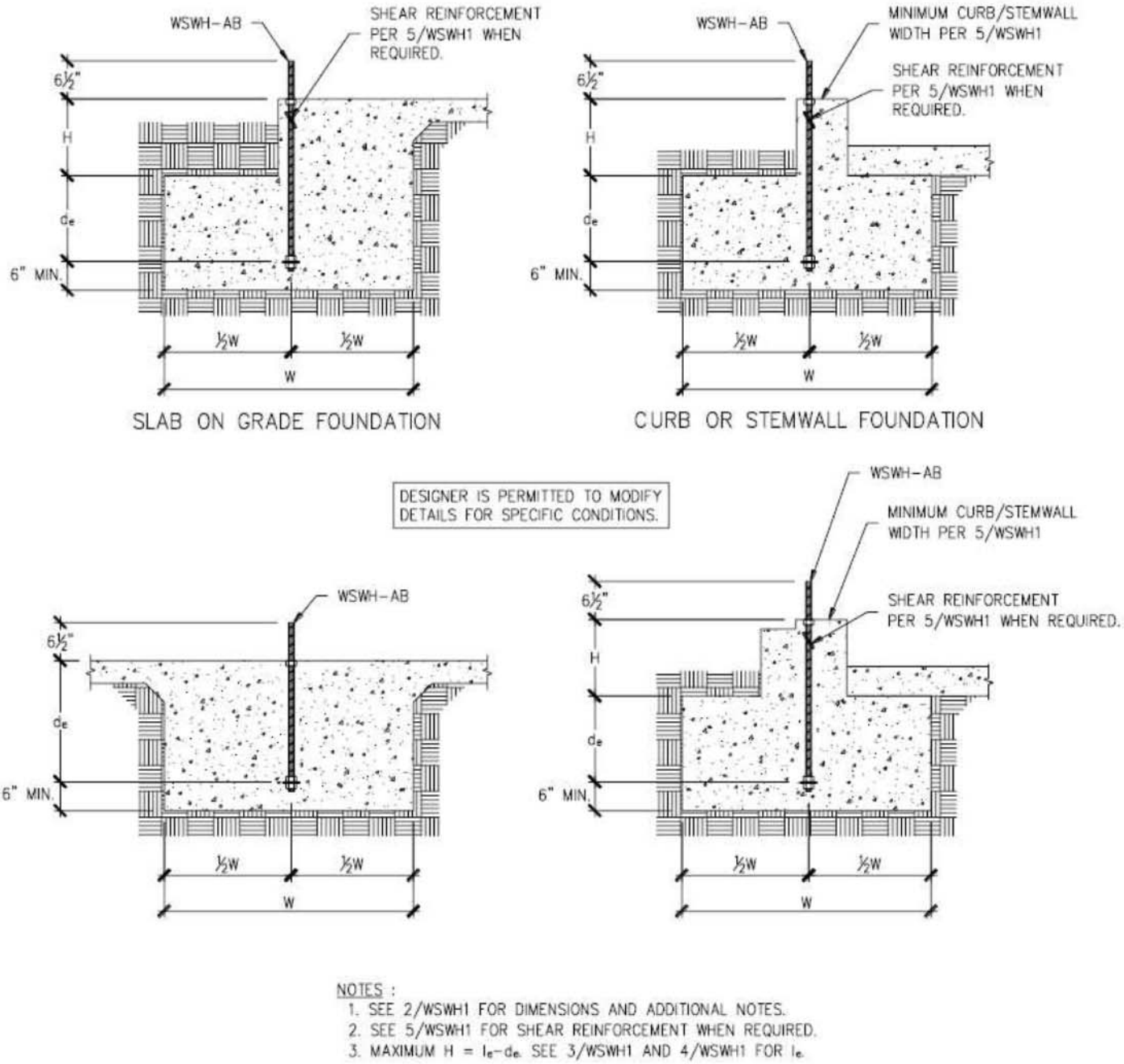

NOTES :
1. SEE 2/WSWH1 FOR DIMENSIONS AND ADDITIONAL NOTES.
2. SEE 5/WSWH1 FOR SHEAR REINFORCEMENT WHEN REQUIRED.
3. MAXIMUM H = $l_e - d_e$. SEE 3/WSWH1 AND 4/WSWH1 FOR l_e.

1/WSWH1 – STRONG-WALL HIGH STRENGTH WOOD SHEARWALL ANCHORAGE – TYPICAL SECTIONS

FIGURE 6 – STRONG-WALL HIGH STRENGTH WOOD SHEARWALL ANCHORAGE DETAILS (1/WSWH1)

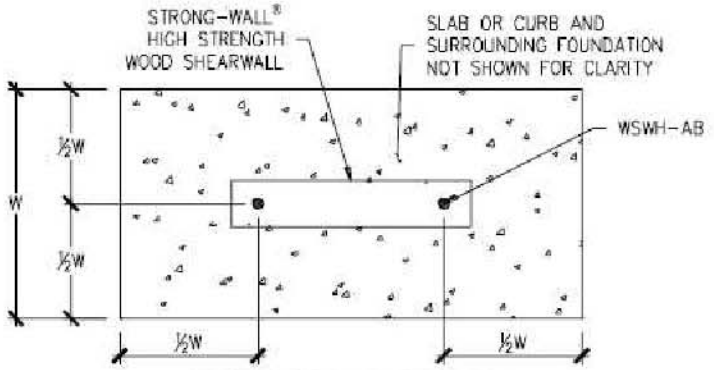

FOUNDATION PLAN VIEW

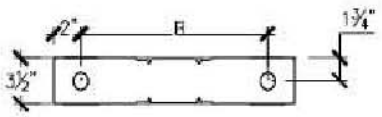

WSWH PLAN VIEW
ANCHORAGE LAYOUT

ANCHOR BOLT LAYOUT	
STRONG-WALL® HIGH STRENGTH WOOD SHEARWALL MODEL NO.	DISTANCE FROM CENTER-TO-CENTER OF WSWH-AB, B (in)
WSWH12	8⅛
WSWH18	14
WSWH24	20

WSWH ANCHORAGE SOLUTIONS FOR 2500 PSI CONCRETE

DESIGN CRITERIA	CONCRETE CONDITION	ANCHOR STRENGTH	WSWH-AB1 ANCHOR BOLT		
			ASD ALLOWABLE UPLIFT (lbs)	W (in)	d_e (in)
SEISMIC	CRACKED	STANDARD	16,000	33	11
			17,100	35	12
		HIGH STRENGTH	34,100	52	18
			36,800	55	19
	UNCRACKED	STANDARD	15,700	28	10
			17,100	30	10
		HIGH STRENGTH	33,500	45	15
			36,800	48	16
WIND	CRACKED	STANDARD	6,200	16	5
			11,400	24	8
			17,100	32	11
		HIGH STRENGTH	21,100	36	12
			27,300	42	14
			34,100	48	16
			36,800	51	17
	UNCRACKED	STANDARD	6,400	14	6
			12,500	22	8
			17,100	28	10
		HIGH STRENGTH	22,900	33	11
			26,400	36	12
			34,200	42	14
			36,800	44	15

NOTES :

1. ANCHORAGE DESIGNS CONFORM TO ACI 318-11 APPENDIX D, ACI 318-14 CHAPTER 17 AND ACI 318-19 CHAPTER 17 WITH NO SUPPLEMENTARY REINFORCEMENT FOR CRACKED OR UNCRACKED CONCRETE AS NOTED.
2. ANCHOR STRENGTH INDICATES REQUIRED GRADE OF WSWH-AB ANCHOR BOLT. STANDARD (ASTM F1554 GRADE 36) OR HIGH STRENGTH (HS) (ASTM A193 GRADE B7).
3. SEISMIC INDICATES SEISMIC DESIGN CATEGORY C-F. DETACHED 1 AND 2 FAMILY DWELLINGS IN SDC C MAY USE WIND ANCHORAGE SOLUTIONS. SEISMIC ANCHORAGE DESIGNS CONFORM TO ACI 318-11 SECTION D.3.3.4.3, ACI 318-14 SECTION 17.2.3.4.3 AND ACI 318-19 SECTION 17.10.5.3.
4. WIND INCLUDES SEISMIC DESIGN CATEGORY A AND B AND DETACHED 1 AND 2 FAMILY DWELLINGS IN SDC C.
5. FOUNDATION DIMENSIONS ARE FOR ANCHORAGE ONLY. FOUNDATION DESIGN (SIZE AND REINFORCEMENT) BY OTHERS. THE DESIGNER MAY SPECIFY ALTERNATE EMBEDMENT, FOOTING SIZE OR ANCHOR BOLT.
6. REFER TO 1/WSWH1 FOR d_e.

2/WSWH1 – STRONG-WALL HIGH STRENGTH WOOD SHEARWALL TENSION ANCHORAGE SCHEDULE

FIGURE 6 – STRONG-WALL HIGH STRENGTH WOOD SHEARWALL ANCHORAGE DETAILS (Continued) (2/WSWH1)

WSWH ANCHORAGE SOLUTIONS FOR 3000 PSI CONCRETE					
DESIGN CRITERIA	CONCRETE CONDITION	ANCHOR STRENGTH	WSWH-AB1 ANCHOR BOLT		
			ASD ALLOWABLE UPLIFT (lbs)	W (in)	d_e (in)
SEISMIC	CRACKED	STANDARD	16,000	31	11
			17,100	33	11
		HIGH STRENGTH	33,900	49	17
			36,800	52	18
	UNCRACKED	STANDARD	16,300	27	9
			17,100	28	10
		HIGH STRENGTH	34,000	43	15
			36,800	46	16
WIND	CRACKED	STANDARD	5,600	14	6
			10,200	21	7
			17,100	30	10
		HIGH STRENGTH	20,000	33	11
			26,500	39	13
			33,600	45	15
			36,800	48	16
	UNCRACKED	STANDARD	6,200	13	6
			12,800	21	7
			17,100	26	9
		HIGH STRENGTH	21,800	30	10
			28,900	36	12
			33,100	39	13
			36,800	42	14

WSWH ANCHORAGE SOLUTIONS FOR 4500 PSI CONCRETE					
DESIGN CRITERIA	CONCRETE CONDITION	ANCHOR STRENGTH	WSWH-AB1 ANCHOR BOLT		
			ASD ALLOWABLE UPLIFT (lbs)	W (in)	d_e (in)
SEISMIC	CRACKED	STANDARD	16,000	27	9
			17,100	29	10
		HIGH STRENGTH	34,700	44	15
			36,800	46	16
	UNCRACKED	STANDARD	15,700	23	8
			17,100	25	9
		HIGH STRENGTH	33,900	38	13
			36,800	40	14
WIND	CRACKED	STANDARD	6,800	14	6
			11,600	20	7
			17,100	26	9
		HIGH STRENGTH	21,400	30	10
			28,400	36	12
			32,400	39	13
			36,800	43	15
	UNCRACKED	STANDARD	6,800	12	6
			12,400	18	6
			17,100	23	8
		HIGH STRENGTH	22,800	27	9
			26,700	30	10
			30,700	33	11
			36,800	37	13

NOTES :

1. ANCHORAGE DESIGNS CONFORM TO ACI 318-11 APPENDIX D, ACI 318-14 CHAPTER 17 AND ACI 318-19 CHAPTER 17 WITH NO SUPPLEMENTARY REINFORCEMENT FOR CRACKED OR UNCRACKED CONCRETE AS NOTED.
2. ANCHOR STRENGTH INDICATES REQUIRED GRADE OF WSWH-AB ANCHOR BOLT. STANDARD (ASTM F1554 GRADE 36) OR HIGH STRENGTH (HS) (ASTM A193 GRADE B7).
3. SEISMIC INDICATES SEISMIC DESIGN CATEGORY C-F. DETACHED 1 AND 2 FAMILY DWELLINGS IN SDC C MAY USE WIND ANCHORAGE SOLUTIONS. SEISMIC ANCHORAGE DESIGNS CONFORM TO ACI 318-11 SECTION D.3.3.4.3, ACI 318-14 SECTION 17.2.3.4.3 AND ACI 318-19 SECTION 17.10.5.3.
4. WIND INCLUDES SEISMIC DESIGN CATEGORY A AND B AND DETACHED 1 AND 2 FAMILY DWELLINGS IN SDC C.
5. FOUNDATION DIMENSIONS ARE FOR ANCHORAGE ONLY. FOUNDATION DESIGN (SIZE AND REINFORCEMENT) BY OTHERS. THE DESIGNER MAY SPECIFY ALTERNATE EMBEDMENT, FOOTING SIZE OR ANCHOR BOLT.
6. REFER TO 1/WSWH1 FOR d_e.

2/WSWH1 – STRONG-WALL HIGH STRENGTH WOOD SHEARWALL TENSION ANCHORAGE SCHEDULE

FIGURE 6 – STRONG-WALL HIGH STRENGTH WOOD SHEARWALL ANCHORAGE DETAILS (Continued) (2/WSWH1)

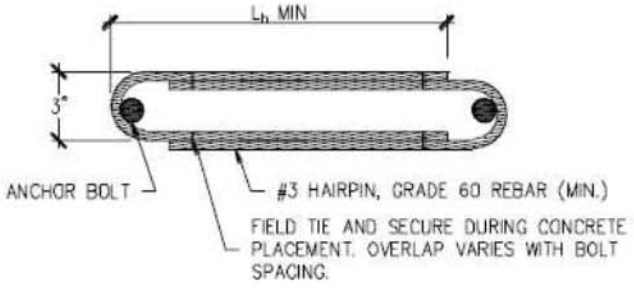

HAIRPIN SHEAR REINFORCEMENT

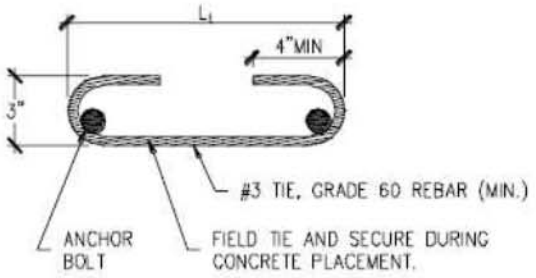

TIE SHEAR REINFORCEMENT

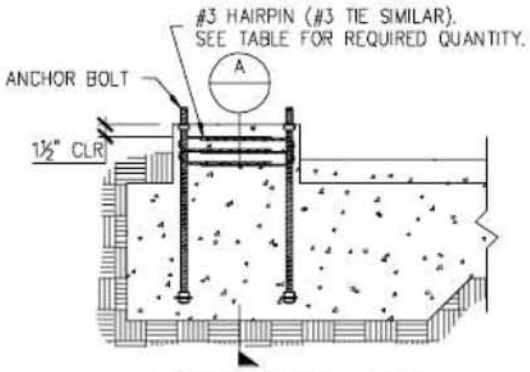

HAIRPIN INSTALLATION

(GARAGE CURB SHOWN. OTHER FOOTING TYPES SIMILAR.)

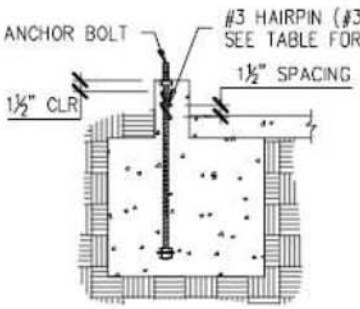

SECTION A

DESIGNER IS PERMITTED TO MODIFY DETAILS FOR SPECIFIC CONDITIONS.

STRONG-WALL® HIGH STRENGTH WOOD SHEARWALL SHEAR ANCHORAGE

MODEL	SEISMIC[3]			WIND[4]			
	L_t OR L_h (in.)	SHEAR REINFORCEMENT	MIN. CURB/ STEMWALL WIDTH (in.)	SHEAR REINFORCEMENT	MIN. CURB/ STEMWALL WIDTH (in.)	ASD ALLOWABLE SHEAR LOAD, V (lb.)	
						UNCRACKED	CRACKED
WSWH12	10¼	(1) #3 TIE	6	SEE NOTE 7	6	1,080	770
WSWH18	15	(2) #3 HAIRPINS[5,8]	6	(1) #3 HAIRPIN	6	HAIRPIN REINF. ACHIEVES MAX. ALLOW SHEAR LOAD OF THE WSWH	
WSWH24	19	(2) #3 HAIRPINS[5]	6	(2) #3 HAIRPINS[5]	6		

NOTES :

1. SHEAR ANCHORAGE DESIGNS CONFORM TO ACI 318-19, ACI 318-11 AND ACI 318-14 AND ASSUME MINIMUM 2,500 PSI CONCRETE.
2. SHEAR REINFORCEMENT IS NOT REQUIRED FOR INTERIOR FOUNDATION APPLICATIONS (PANEL INSTALLED AWAY FROM EDGE OF CONCRETE), OR BRACED WALL PANEL APPLICATIONS.
3. SEISMIC INDICATES SEISMIC DESIGN CATEGORY C THROUGH F. DETACHED 1 AND 2 FAMILY DWELLINGS IN SDC C MAY USE WIND ANCHORAGE SOLUTIONS. SEISMIC SHEAR REINFORCEMENT DESIGNS CONFORM TO ACI 318-19, SECTION 17.10.6.3, ACI 318-14, SECTION 17.2.3.5.3
4. WIND INCLUDES SEISMIC DESIGN CATEGORY A AND B.
5. ADDITIONAL TIES MAY BE REQUIRED AT GARAGE CURB OR STEMWALL INSTALLATIONS BELOW ANCHOR REINFORCEMENT PER DESIGNER.
6. USE (1) #3 HAIRPIN FOR WSWH18 WHEN STANDARD STRENGTH ANCHOR IS USED.
7. USE (1) #3 TIE FOR WSWH12 WHEN PANEL DESIGN SHEAR FORCE EXCEEDS TABULATED ANCHORAGE ALLOWABLE SHEAR LOAD.
8. #4 GRADE 40 SHEAR REINFORCEMENT MAY BE SUBSTITUTED FOR WSWH SHEAR ANCHORAGE SOLUTIONS.
9. CONCRETE EDGE DISTANCE FOR ANCHORS MUST COMPLY WITH ACI 318-19 SECTION 17.9.2, ACI 318-14 SECTION 17.7.2 AND ACI 318-11 SECTION D.8.2.
10. THE DESIGNER MAY SPECIFY ALTERNATE SHEAR ANCHORAGE.

5/WSWH1 – STRONG-WALL HIGH STRENGTH WOOD SHEARWALL SHEAR ANCHORAGE

FIGURE 6 – STRONG-WALL HIGH STRENGTH WOOD SHEARWALL ANCHORAGE DETAILS (Continued) (5/WSWH1)

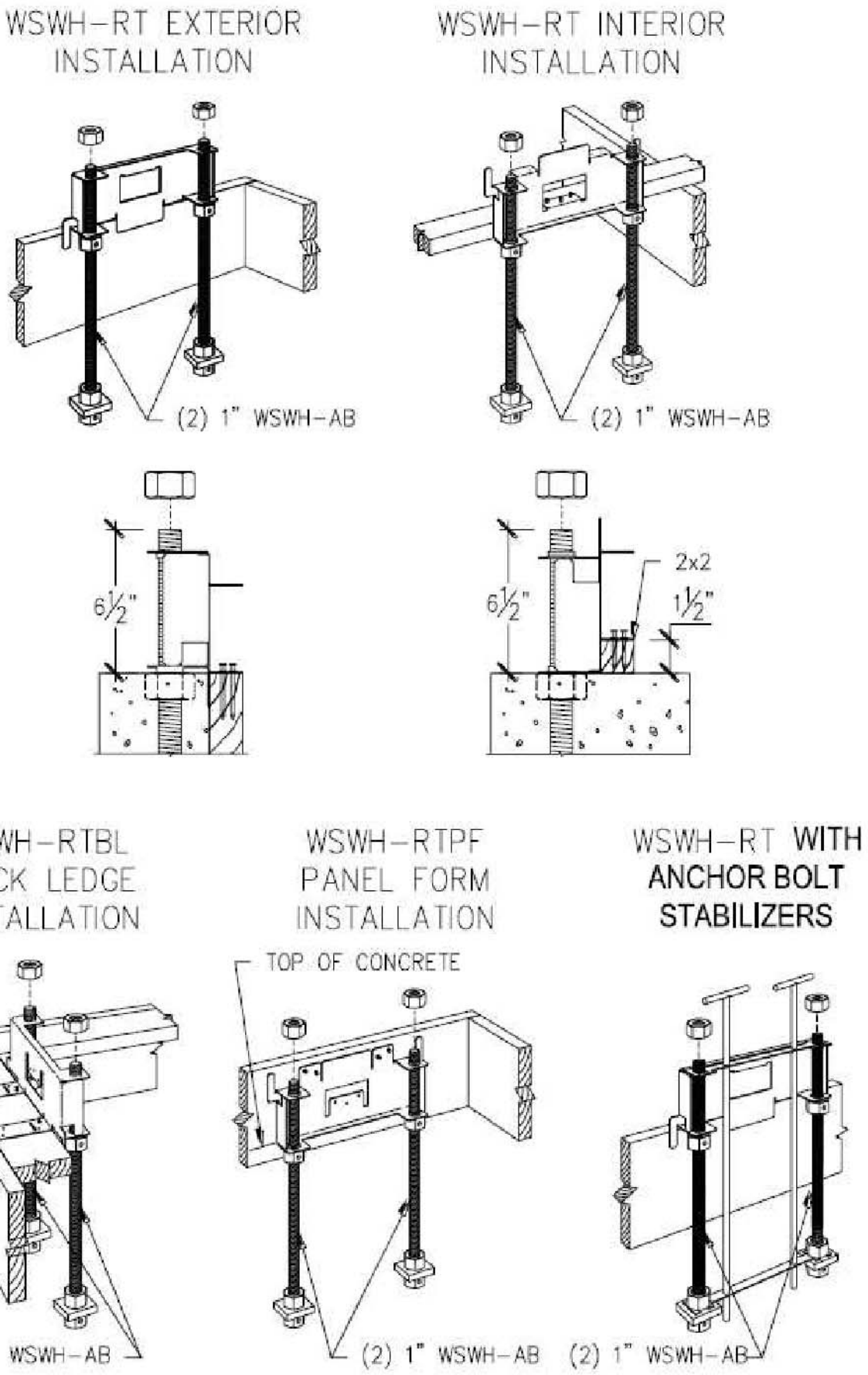

6/WSWH1 – STRONG-WALL HIGH STRENGTH WOOD SHEARWALL ANCHOR BOLT TEMPLATES

FIGURE 6 – STRONG-WALL HIGH STRENGTH WOOD SHEARWALL ANCHORAGE DETAILS (Continued) (6/WSWH1)

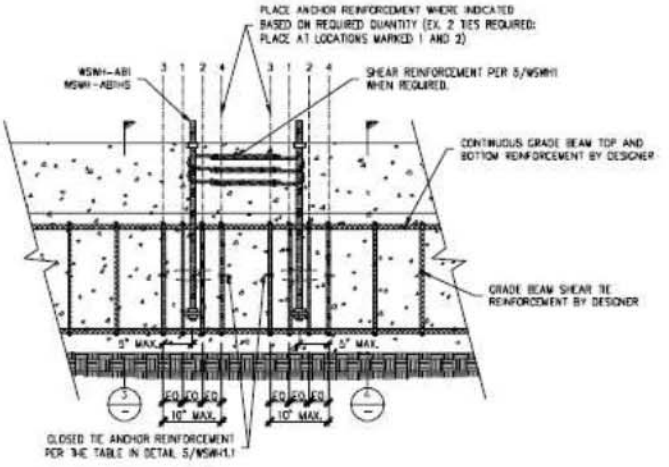

GRADE BEAM ELEVATION AT 18" AND 24" WALL MODELS | 1

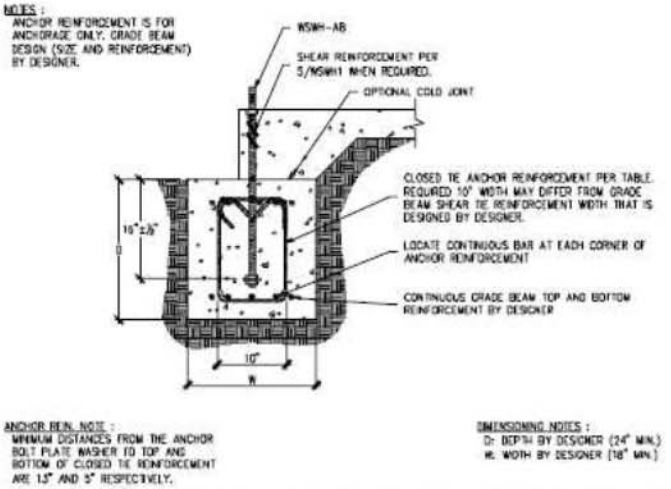

GRADE BEAM SECTION AT ANCHOR REINFORCEMENT | 3

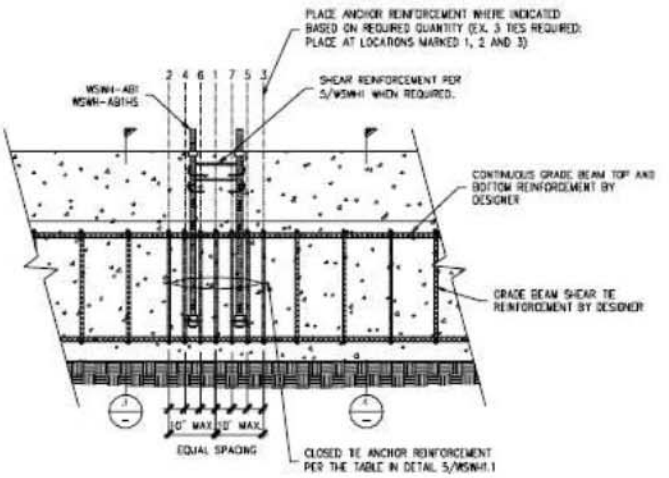

GRADE BEAM ELEVATION AT 12" WALL MODEL | 2

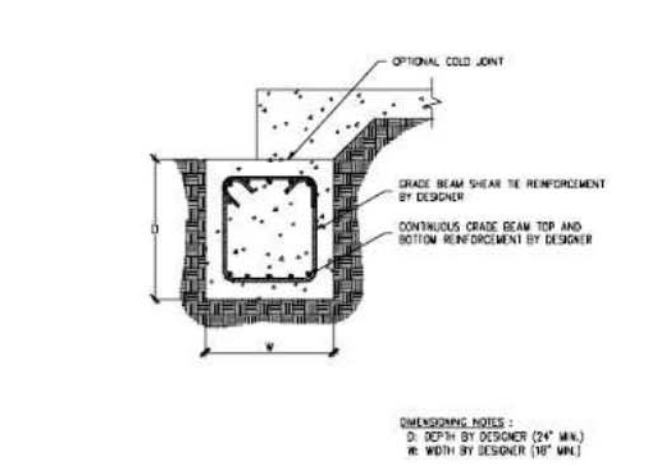

GRADE BEAM SECTION AWAY FROM ANCHOR REINFORCEMENT | 4

WSWH GRADE BEAM ANCHOR REINFORCEMENT

HIGH STRENGTH STRONG-WALL® WOOD SHEARWALL WIDTH (in.)	ANCHOR MODEL NO.	ANCHOR DIAMETER (in.)	ANCHOR REINFORCEMENT FOR WIND AND SEISMIC[3,6,8]		AMPLIFIED LRFD APPLIED DESIGN SEISMIC MOMENT (ft.-lbs.)[3,5,6,7]	
			STANDARD STRENGTH WSWH-AB1	HIGH STRENGTH (HS) WSWH-AB1HS	STANDARD STRENGTH WSWH-AB1	HIGH STRENGTH (HS) WSWH-AB1HS
12" MODEL	WSWH-AB1 WSWH-AB1HS	1	3-#4 CLOSED TIES PER (2)	7-#4 CLOSED TIES PER (2)	29,500	31,300
18" MODEL			2-#4 CLOSED TIES PER (1)	4-#4 CLOSED TIES PER (1)	48,000	72,900
24" MODEL					67,100	103,500

NOTE :
1. ANCHOR REINFORCEMENT CONFORMS TO ACI 318-16 SECTION 17.5.2.1, ACI 318-14 SECTION 17.4.2.9 AND ACI 318-11 SECTION D.5.2.9. FULL-SCALE TESTING WAS USED TO VALIDATE ANCHOR REINFORCEMENT CONFIGURATION AND PLACEMENT.
2. MINIMUM CONCRETE COMPRESSIVE STRENGTH, f'_c = 2500 psi.
3. CLOSED TIE ANCHOR REINFORCEMENT TO BE ASTM A615 GRADE 60 [MIN] #4 REBAR.
4. GRADE BEAM LONGITUDINAL AND TIE REINFORCEMENT SHALL BE SPECIFIED BY THE DESIGNER FOR FLEXURE AND SHEAR LOADING. DESIGN SHOULD CONSIDER PROJECT SPECIFIC DESIGN LOADS AND ALLOWABLE SOIL PRESSURE.
5. SIMPSON STRONG-TIE RECOMMENDS USING THE TABULATED MINIMUM AMPLIFIED LRFD APPLIED SEISMIC DESIGN MOMENT TO ENSURE GRADE BEAM DESIGN FLEXURE AND SHEAR STRENGTH IS ADEQUATE TO PREVENT PLASTIC HINGE FORMATION UNDER DEMANDS ASSOCIATED WITH ANCHORAGE FORCES CORRESPONDING TO ACI 318-19 SECTION 17.10.5.3, ACI 318-14 SECTION 17.2.3.4.3 AND ACI 318-11 SECTION D.3.3.4.3.
6. DESIGNER MAY USE REDUCED MOMENT DUE TO APPLIED WSWH LATERAL LOAD. MINIMUM MOMENT SHALL BE THE LESSER OF THE TABULATED MOMENT OR THE AMPLIFIED LRFD DESIGN MOMENT FOR SEISMIC: (ASD DESIGN DEMAND SHEAR/0.7) x Q_E x WSWH WALL HEIGHT FOR GRADE BEAM DESIGN.
7. MINIMUM GRADE BEAM DESIGN MOMENT FOR WIND AND SEISMIC IN SEISMIC DESIGN CATEGORY A AND B AND DETACHED 1 AND 2 FAMILY DWELLINGS IN SDC C: (ASD DESIGN DEMAND SHEAR/0.8) x WSWH WALL HEIGHT.
8. CLOSED TIE MAY BE SINGLE PIECE HOOP OR TWO PIECE ASSEMBLY WITH A U-STIRRUP WITH STANDARD 135 DEGREE HOOKS AND A TOP CROSS TIE CAP. SEE DETAIL 5/WSWH1.1.
9. SEE DETAILS FOR GRADE BEAM ANCHOR REINFORCEMENT PLACEMENT, INSTALLATION AND SPACING REQUIREMENTS. CLOSED TIE ANCHOR REINFORCEMENT QUANTITY IS PER WALL FOR THE 12" WALL MODEL AND PER ANCHOR FOR THE 18" AND 24" MODELS.

WSWH-AB ANCHOR GRADE BEAM REINFORCEMENT AND DESIGN MOMENTS | 5

1, 2, 3, 4, 5/WSWH1.1 – WSWH-AB ANCHOR GRADE BEAM REINFORCEMENT AND DESIGN MOMENTS

FIGURE 6 – STRONG-WALL HIGH STRENGTH WOOD SHEARWALL ANCHORAGE DETAILS (Continued) (1, 2, 3, 4, 5/WSWH1.1)

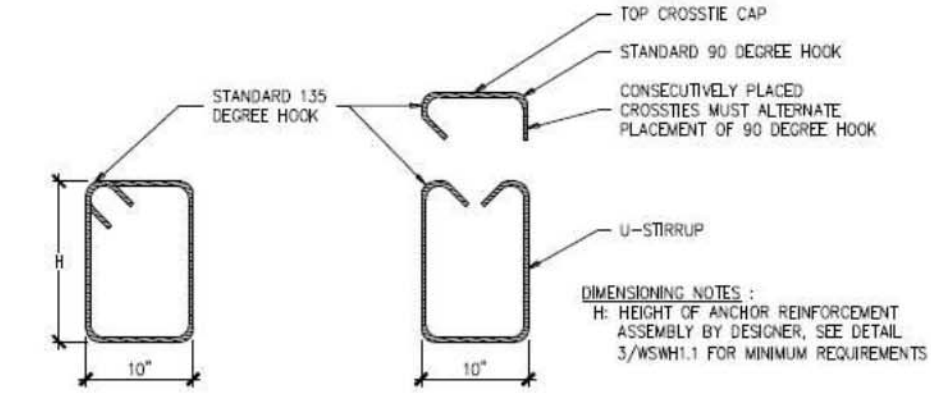

#4 SINGLE PIECE HOOP #4 TWO PIECE ASSEMBLY

CLOSED TIE ANCHOR REINFORCEMENT 6/WSWH1.1

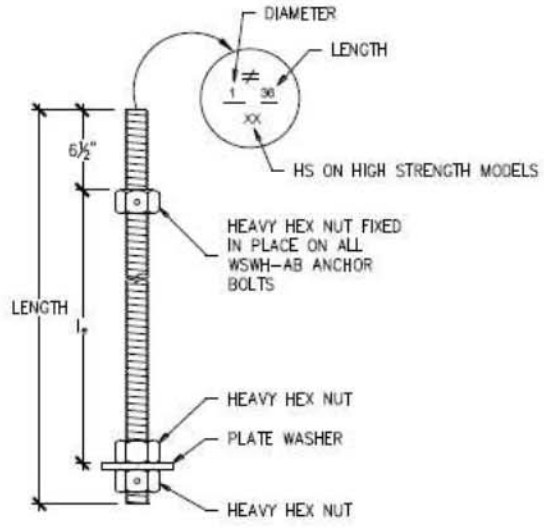

WSWH PANEL MODEL	MODEL NO.	DIAMETER	LENGTH	l_e
WSWH12, WSWH18 AND WSWH24	WSWH-AB1x24	1"	24"	15½"
	WSWH-AB1x24HS	1"	24"	15½"
	WSWH-AB1x30	1"	30"	21½"
	WSWH-AB1x30HS	1"	30"	21½"
	WSWH-AB1x36	1"	36"	27½"
	WSWH-AB1x36HS	1"	36"	27½"

WSWH ANCHOR BOLT 3/WSWH1

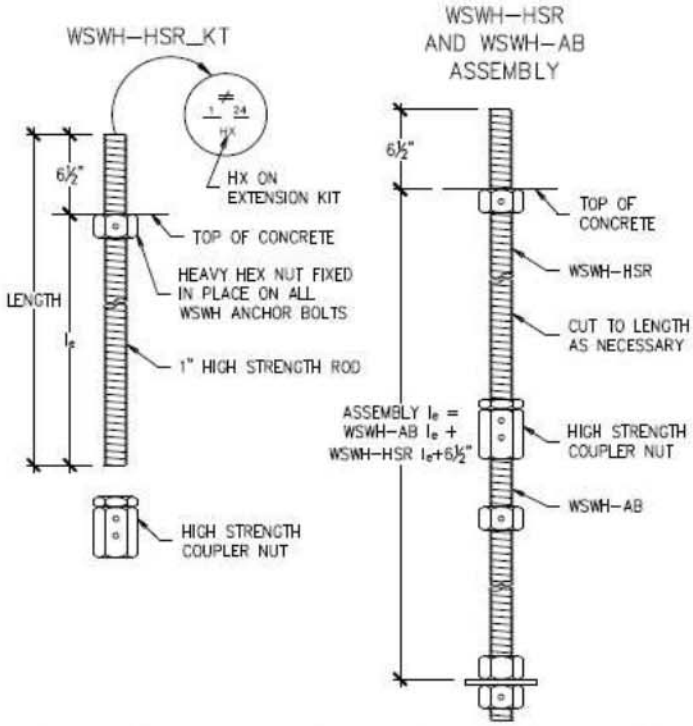

WSWH PANEL MODEL	MODEL NO.	DIAMETER	LENGTH	l_e
WSWH12, WSWH18 AND WSWH24	WSWH-HSR1x24KT	1"	24"	17½"
	WSWH-HSR1x36KT	1"	36"	29½"

WSWH ANCHOR BOLT EXTENSION 4/WSWH1

FIGURE 6 – STRONG-WALL HIGH STRENGTH WOOD SHEARWALL

ANCHORAGE DETAILS (Continued) (3, 4/WSWH1, 6/WSWH1.1)

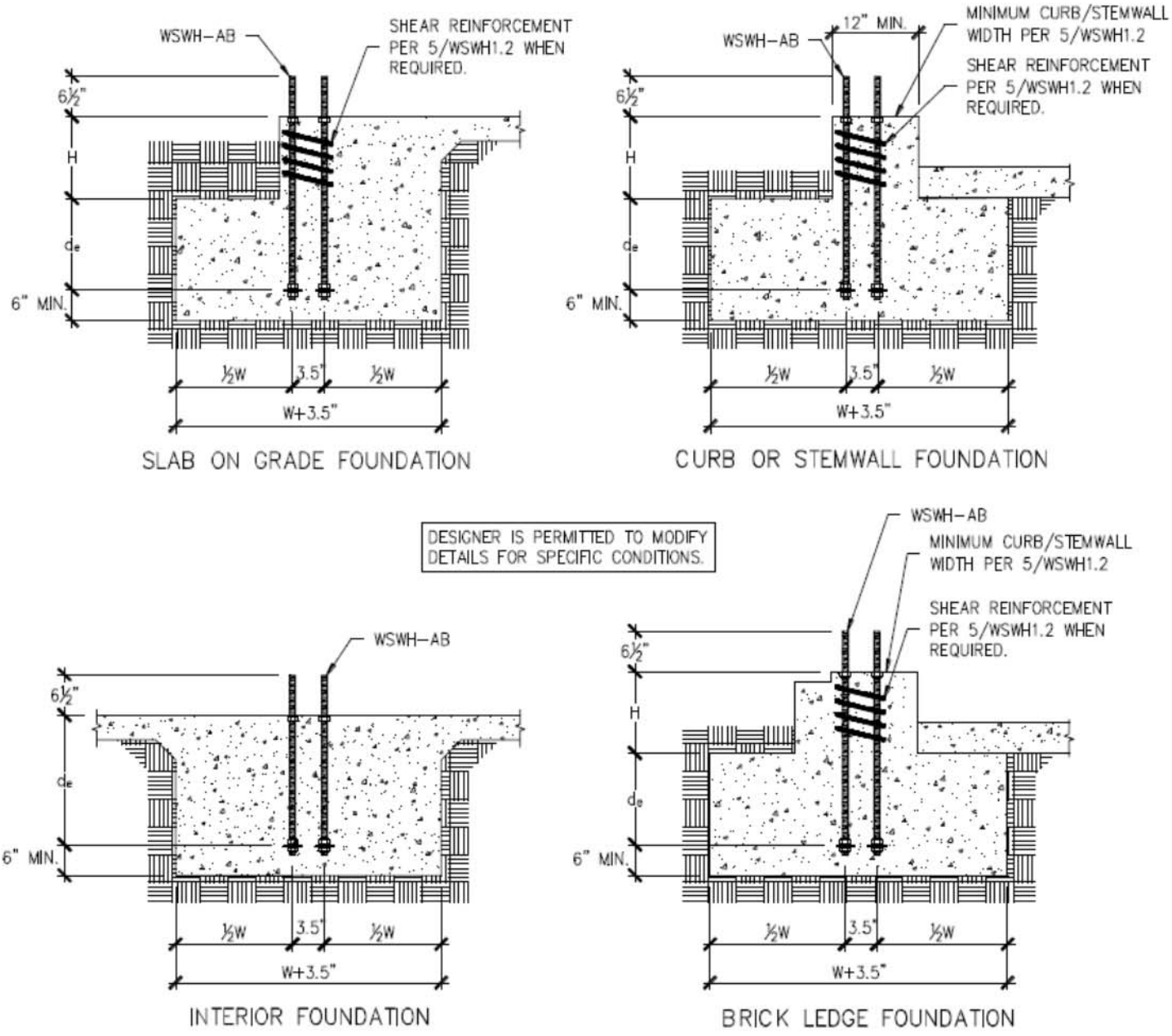

NOTES :

1. SEE 2/WSWH1.2 FOR DIMENSIONS AND ADDITIONAL NOTES.
2. SEE 5/WSWH1.2 FOR SHEAR REINFORCEMENT WHEN REQUIRED.
3. MAXIMUM H = l_e–d_e. SEE 3/WSWH1.2 AND 4/WSWH1.2 FOR l_e.

1/WSWH1.2 – STRONG-WALL WSWH BACK-TO-BACK ANCHORAGE – TYPICAL SECTIONS

FIGURE 7 – STRONG-WALL HIGH STRENGTH WOOD SHEARWALL BACK-TO-BACK ANCHORAGE DETAILS (1/WSWH1.2)

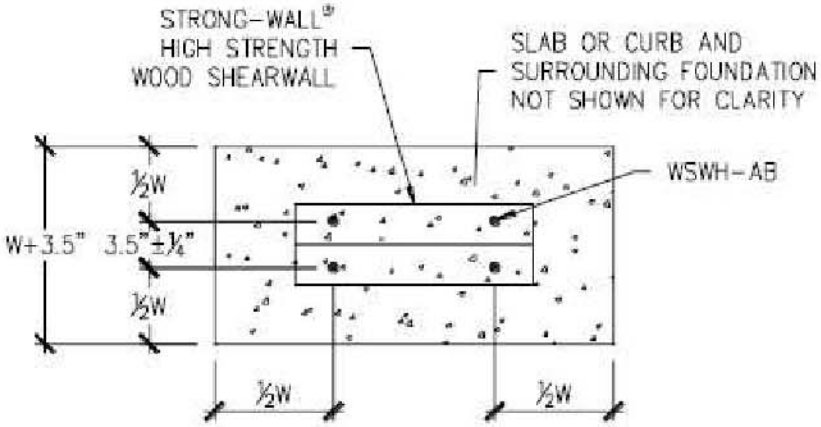

FOUNDATION PLAN VIEW

WSWH BACK-TO-BACK ANCHORAGE SOLUTIONS FOR 2500 PSI CONCRETE					
DESIGN CRITERIA	CONCRETE CONDITION	ANCHOR STRENGTH	WSWH-AB1 ANCHOR BOLT		
			ASD ALLOWABLE UPLIFT (lbs)	W (in)	d_e (in)
SEISMIC	CRACKED	STANDARD	34,200	50	17
		HIGH STRENGTH	73,600	90	30
	UNCRACKED	STANDARD	34,200	44	15
		HIGH STRENGTH	73,600	71	24
WIND	CRACKED	STANDARD	8,800	18	6
			23,200	36	12
			34,200	46	16
		HIGH STRENGTH	44,200	54	18
			52,400	60	20
			61,100	66	22
			73,600	75	25
	UNCRACKED	STANDARD	11,100	18	6
			22,200	30	10
			34,200	40	14
		HIGH STRENGTH	45,800	48	16
			55,300	56	18
			65,500	60	20
			73,600	65	22

NOTES :

1. ANCHORAGE DESIGNS CONFORM TO ACI 318-11 APPENDIX D, ACI 318-14 CHAPTER 17 AND ACI 318-19 CHAPTER 17 WITH NO SUPPLEMENTARY REINFORCEMENT FOR CRACKED OR UNCRACKED CONCRETE AS NOTED.
2. ANCHOR STRENGTH INDICATES REQUIRED GRADE OF WSWH-AB ANCHOR BOLT. STANDARD (ASTM F1554 GRADE 36) OR HIGH STRENGTH (HS) (ASTM A193 GRADE B7).
3. SEISMIC INDICATES SEISMIC DESIGN CATEGORY C-F. DETACHED 1 AND 2 FAMILY DWELLINGS IN SDC C MAY USE WIND ANCHORAGE SOLUTIONS. SEISMIC ANCHORAGE DESIGNS CONFORM TO ACI 318-11 SECTION D.3.3.4.3, ACI 318-14 SECTION 17.2.3.4.3, AND ACI 318-19 SECTION 17.10.5.3.
4. WIND INCLUDES SEISMIC DESIGN CATEGORY A AND B AND DETACHED 1 AND 2 FAMILY DWELLINGS IN SDC C.
5. SOLUTIONS ASSUME THAT BACK-TO-BACK PANEL ARE IN CONTACT WITH EACH OTHER.
6. FOUNDATION DIMENSIONS ARE FOR ANCHORAGE ONLY. FOUNDATION DESIGN (SIZE AND REINFORCEMENT) BY OTHERS. THE DESIGNER MAY SPECIFY ALTERNATE EMBEDMENT, FOOTING SIZE OR ANCHOR BOLT.
7. REFER TO 1/WSWH1.2 FOR d_e.

2/WSWH1.2 – STRONG-WALL WSWH BACK-TO-BACK ANCHORAGE TENSION ANCHORAGE SCHEDULE

FIGURE 7 – STRONG-WALL HIGH STRENGTH WOOD SHEARWALL BACK-TO-BACK ANCHORAGE DETAILS (Continued) (2/WSWH1.2)

WSWH BACK-TO-BACK ANCHORAGE SOLUTIONS FOR 3000 PSI CONCRETE					
DESIGN CRITERIA	CONCRETE CONDITION	ANCHOR STRENGTH	WSWH-AB1 ANCHOR BOLT		
			ASD ALLOWABLE UPLIFT (lbs)	W (in)	d_e (in)
SEISMIC	CRACKED	STANDARD	34,200	48	16
		HIGH STRENGTH	73,600	76	26
	UNCRACKED	STANDARD	34,200	42	14
		HIGH STRENGTH	73,600	67	23
WIND	CRACKED	STANDARD	9700	18	6
			19,500	30	10
			34,200	44	15
		HIGH STRENGTH	48,500	54	18
			57,400	60	20
			66,900	66	22
			73,600	70	24
	UNCRACKED	STANDARD	12,100	18	6
			24,400	30	10
			34,200	38	13
		HIGH STRENGTH	45,200	45	15
			60,600	54	18
			71,800	60	20
			73,600	61	21

WSWH BACK-TO-BACK ANCHORAGE SOLUTIONS FOR 4500 PSI CONCRETE					
DESIGN CRITERIA	CONCRETE CONDITION	ANCHOR STRENGTH	WSWH-AB1 ANCHOR BOLT		
			ASD ALLOWABLE UPLIFT (lbs)	W (in)	d_e (in)
SEISMIC	CRACKED	STANDARD	34,200	42	14
		HIGH STRENGTH	73,600	68	23
	UNCRACKED	STANDARD	34,200	37	13
		HIGH STRENGTH	73,600	59	20
WIND	CRACKED	STANDARD	11,900	18	6
			23,900	30	10
			34,200	39	13
		HIGH STRENGTH	39,700	42	14
			49,100	48	16
			64,700	57	19
			73,600	62	21
	UNCRACKED	STANDARD	14,800	18	6
			25,800	27	9
			34,200	34	12
		HIGH STRENGTH	44,100	39	13
			55,400	45	15
			67,700	51	17
			73,600	54	18

NOTES :

1. ANCHORAGE DESIGNS CONFORM TO ACI 318-11 APPENDIX D, ACI 318-14 CHAPTER 17 AND ACI 318-19 CHAPTER 17 WITH NO SUPPLEMENTARY REINFORCEMENT FOR CRACKED OR UNCRACKED CONCRETE AS NOTED.
2. ANCHOR STRENGTH INDICATES REQUIRED GRADE OF WSWH-AB ANCHOR BOLT. STANDARD (ASTM F1554 GRADE 36) OR HIGH STRENGTH (HS) (ASTM A193 GRADE B7).
3. SEISMIC INDICATES SEISMIC DESIGN CATEGORY C-F. DETACHED 1 AND 2 FAMILY DWELLINGS IN SDC C MAY USE WIND ANCHORAGE SOLUTIONS. SEISMIC ANCHORAGE DESIGNS CONFORM TO ACI 318-11 SECTION D.3.3.4.3, ACI 318-14 SECTION 17.2.3.4.3, AND ACI 318-19 SECTION 17.10.5.3.
4. WIND INCLUDES SEISMIC DESIGN CATEGORY A AND B AND DETACHED 1 AND 2 FAMILY DWELLINGS IN SDC C.
5. SOLUTIONS ASSUME THAT BACK-TO-BACK PANEL ARE IN CONTACT WITH EACH OTHER.
6. FOUNDATION DIMENSIONS ARE FOR ANCHORAGE ONLY. FOUNDATION DESIGN (SIZE AND REINFORCEMENT) BY OTHERS. THE DESIGNER MAY SPECIFY ALTERNATE EMBEDMENT, FOOTING SIZE OR ANCHOR BOLT.
7. REFER TO 1/WSWH1.2 FOR d_e.

2/WSWH1.2 – STRONG-WALL WSWH BACK-TO-BACK ANCHORAGE TENSION ANCHORAGE SCHEDULE

FIGURE 7 – STRONG-WALL HIGH STRENGTH WOOD SHEARWALL BACK-TO-BACK ANCHORAGE DETAILS (Continued) (2/WSWH1.2)

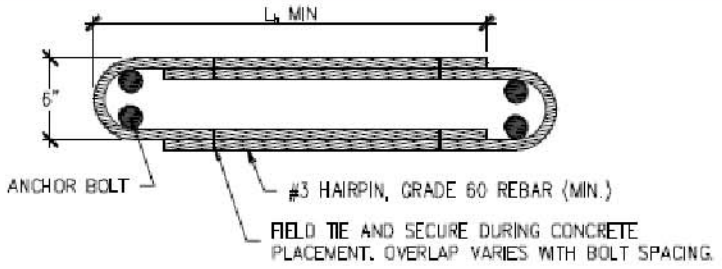

HAIRPIN SHEAR REINFORCEMENT

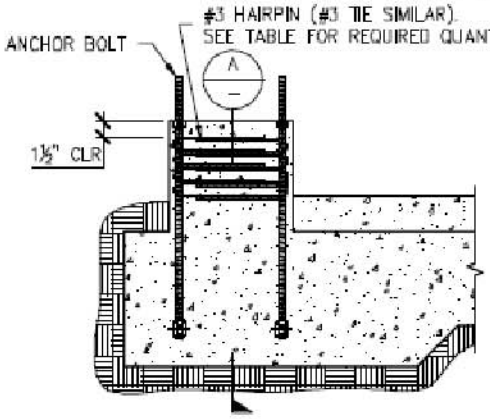

HAIRPIN INSTALLATION
(GARAGE CURB SHOWN. OTHER FOOTING TYPES SIMILAR.)

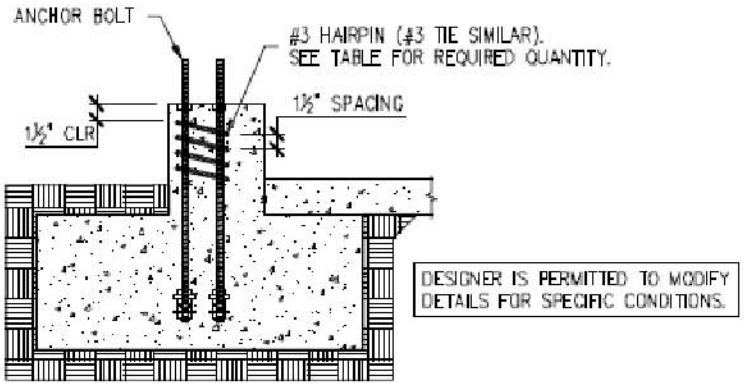

SECTION A

STRONG-WALL® WSWH BACK-TO-BACK SHEAR ANCHORAGE

MODEL	SEISMIC[3]			WIND[4]	
	L_h (in.)	SHEAR REINFORCEMENT	MIN. CURB/ STEMWALL WIDTH (in.)	SHEAR REINFORCEMENT	MIN. CURB/ STEMWALL WIDTH (in.)
(2) WSWH12	10¼	(1) #3 HAIRPIN	12	(1) #3 HAIRPIN	12
(2) WSWH18	15	(3) #3 HAIRPINS[5,7]	12	(2) #3 HAIRPINS	12
(2) WSWH24	19	(4) #3 HAIRPINS[5,7]	12	(3) #3 HAIRPINS[5]	12

NOTES :

1. SHEAR ANCHORAGE DESIGNS CONFORM TO ACI 318–11, ACI 318–14 AND ACI 318–19 AND ASSUME MINIMUM 2,500 PSI CONCRETE.
2. SHEAR REINFORCEMENT IS NOT REQUIRED FOR INTERIOR FOUNDATION APPLICATIONS (PANEL INSTALLED AWAY FROM EDGE OF CONCRETE), OR BRACED WALL PANEL APPLICATIONS.
3. SEISMIC INDICATES SEISMIC DESIGN CATEGORY C THROUGH F. DETACHED 1 AND 2 FAMILY DWELLINGS IN SDC C MAY USE WIND ANCHORAGE SOLUTIONS. SEISMIC SHEAR REINFORCEMENT DESIGNS CONFORM TO ACI 318–19, SECTION 17.10.6.3 AND ACI 318–14, SECTION 17.2.3.5.3.
4. WIND INCLUDES SEISMIC DESIGN CATEGORY A AND B.
5. HIGH STRENGTH ANCHORAGE IS ASSUMED IN TABLE.
6. ADDITIONAL TIES MAY BE REQUIRED AT GARAGE CURB OR STEMWALL INSTALLATIONS BELOW ANCHOR REINFORCEMENT PER DESIGNER.
7. USE (2) #3 HAIRPINS FOR WSWH18 AND WSWH24 WHEN STANDARD STRENGTH ANCHORAGE IS USED.
8. #4 GRADE 40 SHEAR REINFORCEMENT MAY BE SUBSTITUTED FOR WSWH SHEAR ANCHORAGE SOLUTIONS.
9. CONCRETE EDGE DISTANCE FOR ANCHORS MUST COMPLY WITH ACI 318–19 SECTION 17.9.2, ACI 318–14 SECTION 17.7.2 AND ACI 318–11 SECTION D.8.2.
10. THE DESIGNER MAY SPECIFY ALTERNATE SHEAR ANCHORAGE.

5/WSWH1.2 – STRONG-WALL HIGH STRENGTH WOOD SHEARWALL BACK-TO-BACK SHEAR ANCHORAGE

FIGURE 7 – STRONG-WALL HIGH STRENGTH WOOD SHEARWALL BACK-TO-BACK ANCHORAGE DETAILS (Continued) (5/WSWH1.2)

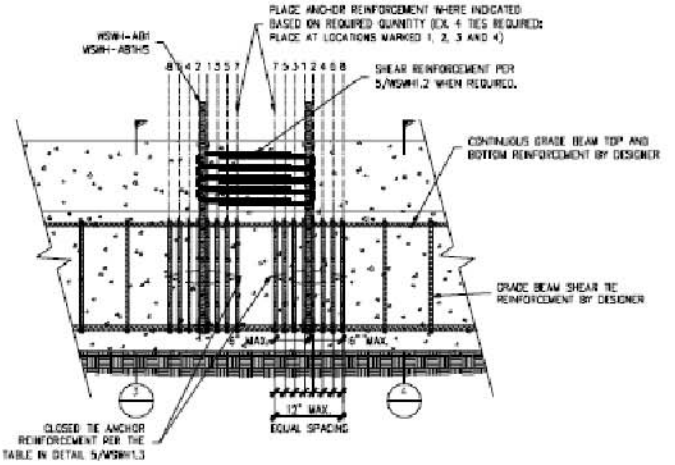

BACK-TO-BACK GRADE BEAM ELEVATION AT 18" AND 24" WALL MODELS | 1

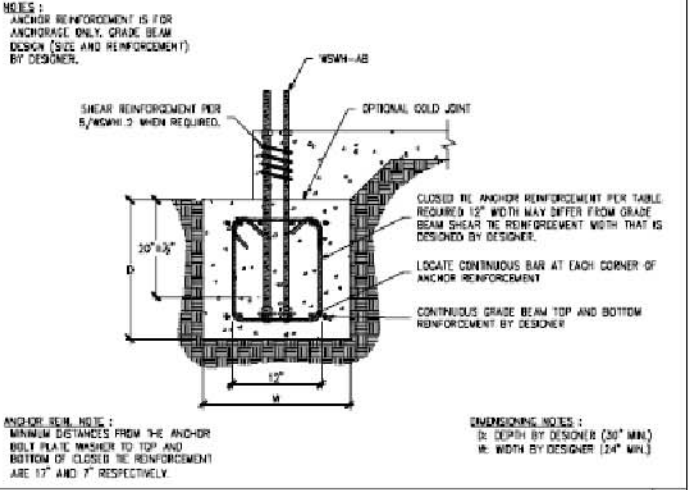

BACK-TO-BACK GRADE BEAM SECTION AT ANCHOR REINFORCEMENT | 3

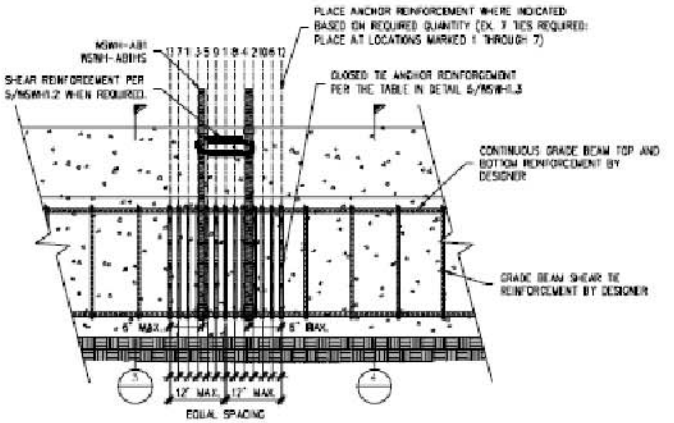

BACK-TO-BACK GRADE BEAM ELEVATION AT 12" WALL MODEL | 2

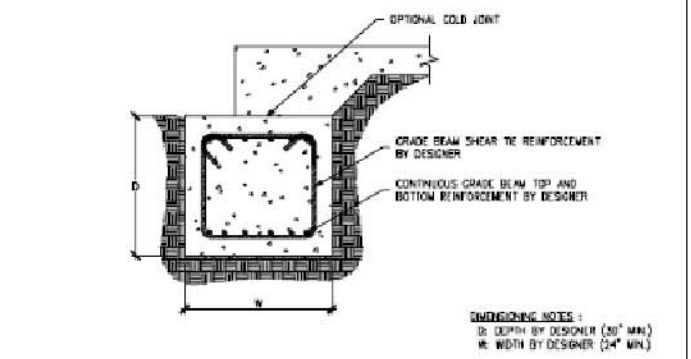

BACK-TO-BACK GRADE BEAM SECTION AWAY FROM ANCHOR REINFORCEMENT | 4

WSWH BACK-TO-BACK GRADE BEAM ANCHOR REINFORCEMENT

HIGH STRENGTH STRONG-WALL® WOOD SHEARWALL WIDTH (h_w)	ANCHOR MODEL NO.	ANCHOR DIAMETER (in.)	ANCHOR REINFORCEMENT FOR WIND AND SEISMIC[4,6,9]		AMPLIFIED LRFD APPLIED DESIGN SEISMIC MOMENT (ft.-lbs.)[4,6,7]	
			STANDARD STRENGTH WSWH-AB1	HIGH STRENGTH (HS) WSWH-AB1H5	STANDARD STRENGTH WSWH-AB1	HIGH STRENGTH (HS) WSWH-AB1H5
12" MODEL	WSWH-AB1 WSWH-AB1H5	1	7-#4 CLOSED TIES OR 5-#5 CLOSED TIES PER (2)	13-#4 CLOSED TIES OR 11-#5 CLOSED TIES PER (2)	58,800	82,600
18" MODEL			4-#4 CLOSED TIES OR 3-#5 CLOSED TIES PER (1)	8-#4 CLOSED TIES OR 6-#5 CLOSED TIES PER (1)	98,100	145,700
24" MODEL					134,200	207,000

NOTE:
1. ANCHOR REINFORCEMENT CONFORMS TO ACI 318-19 SECTION 17.5.2.1, ACI 318-14 SECTION 17.4.2.9 AND ACI 318-11 SECTION D.5.2.9. FULL-SCALE TESTING WAS USED TO VALIDATE ANCHOR REINFORCEMENT CONFIGURATION AND PLACEMENT.
2. MINIMUM CONCRETE COMPRESSIVE STRENGTH, f'_c = 2500 psi.
3. CLOSED TIE ANCHOR REINFORCEMENT TO BE ASTM A615 GRADE 60 (MIN.) #4 REBAR.
4. GRADE BEAM LONGITUDINAL AND TIE REINFORCEMENT SHALL BE SPECIFIED BY THE DESIGNER FOR FLEXURE AND SHEAR LOADING. DESIGN SHOULD CONSIDER PROJECT SPECIFIC DESIGN LOADS AND ALLOWABLE SOIL PRESSURE.
5. SIMPSON STRONG-TIE RECOMMENDS USING THE TABULATED MINIMUM AMPLIFIED LRFD APPLIED SEISMIC DESIGN MOMENT TO ENSURE GRADE BEAM DESIGN FLEXURE AND SHEAR STRENGTH IS ADEQUATE TO PREVENT PLASTIC HINGE FORMATION UNDER DEMANDS ASSOCIATED WITH ANCHORAGE FORCES CORRESPONDING TO ACI 318-19 SECTION 17.10.5.3, ACI 318-14 SECTION 17.2.3.4.3 AND ACI 318-11 SECTION D.5.3.4.3.
6. DESIGNER MAY USE REDUCED MOMENT DUE TO APPLIED WSWH LATERAL LOAD, MINIMUM MOMENT SHALL BE THE LESSER OF THE TABULATED MOMENT OR THE AMPLIFIED LRFD DESIGN MOMENT FOR SEISMIC (ASD DESIGN DEMAND SHEAR/0.7) x Q_E x WSWH WALL HEIGHT FOR GRADE BEAM DESIGN.
7. MINIMUM GRADE BEAM DESIGN MOMENT FOR WIND AND SEISMIC IN SEISMIC DESIGN CATEGORY A AND B AND DETACHED 1 AND 2 FAMILY DWELLINGS IN SDC D: (ASD DESIGN DEMAND SHEAR/0.6) x WSWH WALL HEIGHT.
8. CLOSED TIE MAY BE SINGLE PIECE HOOP OR TWO PIECE ASSEMBLY WITH A U-STIRRUP WITH STANDARD 135 DEGREE HOOKS AND A 90P CROSS TIE CAP. SEE DETAIL 6/WSWH1.3.
9. SEE DETAILS FOR GRADE BEAM ANCHOR REINFORCEMENT PLACEMENT, INSTALLATION AND SPACING REQUIREMENTS. CLOSED TIE ANCHOR REINFORCEMENT QUANTITY IS PER WALL FOR THE 12" WALL MODEL, AND PER ANCHOR FOR THE 18" AND 24" MODELS.

WSWH-AB ANCHOR BACK-TO-BACK GRADE BEAM REINFORCEMENT AND DESIGN MOMENTS | 5

1, 2, 3, 4, 5/WSWH1.3 – BACK-TO-BACK WSWH-AB ANCHOR GRADE BEAM REINFORCEMENT AND DESIGN MOMENTS

FIGURE 7 – STRONG-WALL HIGH STRENGTH WOOD SHEARWALL BACK-TO-BACK ANCHORAGE DETAILS (Continued) (1, 2, 3, 4, 5/WSWH1.3)

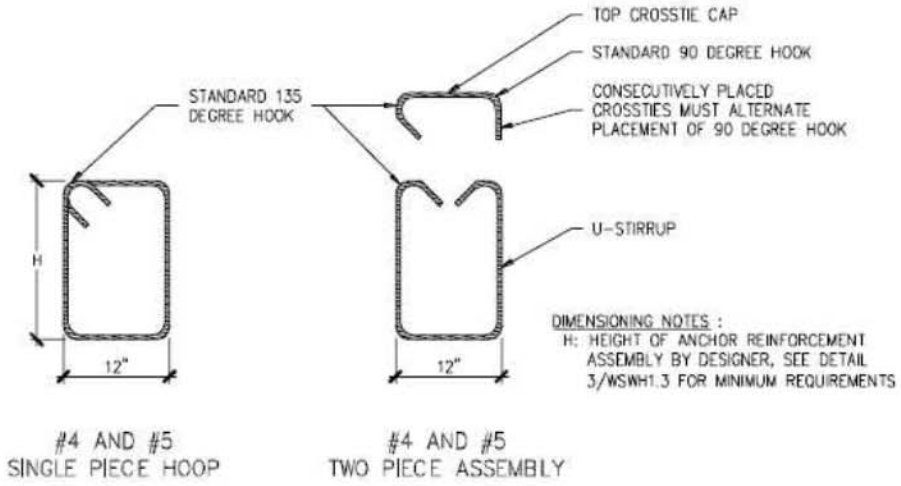

CLOSED TIE ANCHOR REINFORCEMENT 6/WSWH1.3

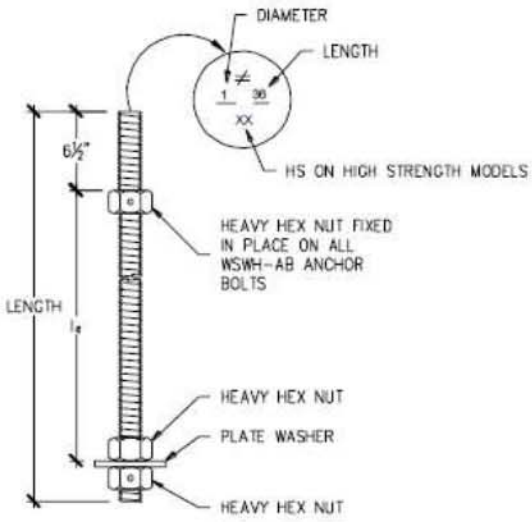

WSWH PANEL MODEL	MODEL NO.	DIAMETER	LENGTH	l_e
WSWH12, WSWH18 AND WSWH24	WSWH-AB1x24	1"	24"	15½"
	WSWH-AB1x24HS	1"	24"	15½"
	WSWH-AB1x30	1"	30"	21½"
	WSWH-AB1x30HS	1"	30"	21½"
	WSWH-AB1x36	1"	36"	27½"
	WSWH-AB1x36HS	1"	36"	27½"

WSWH ANCHOR BOLT 3/WSWH1.2

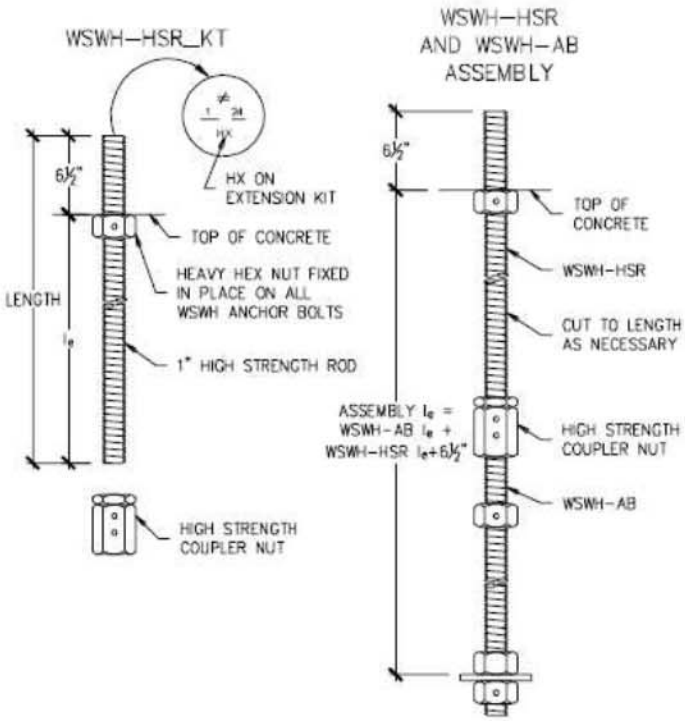

WSWH PANEL MODEL	MODEL NO.	DIAMETER	LENGTH	l_e
WSWH12, WSWH18 AND WSWH24	WSWH-HSR1x24KT	1"	24"	17½"
	WSWH-HSR1x36KT	1"	36"	29½"

WSWH ANCHOR BOLT EXTENSION 4/WSWH1.2

FIGURE 7 – STRONG-WALL HIGH STRENGTH WOOD SHEARWALL BACK-TO-BACK ANCHORAGE DETAILS (Continued) (3, 4/WSWH1.2, 6/WSWH1.3)

ICC-ES Evaluation Report

ESR-2652 LABC and LARC Supplement

Reissued April 2022
Revised May 2022
This report is subject to renewal April 2023.

www.icc-es.org | (800) 423-6587 | (562) 699-0543 *A Subsidiary of the International Code Council®*

DIVISION: 06 00 00—WOOD, PLASTICS AND COMPOSITES
Section: 06 12 19—Shear Wall Panels

REPORT HOLDER:

SIMPSON STRONG-TIE COMPANY INC.

EVALUATION SUBJECT:

STRONG-WALL® HIGH STRENGTH WOOD SHEARWALL PANELS (WSWHs)

1.0 REPORT PURPOSE AND SCOPE

Purpose:

The purpose of this evaluation report supplement is to indicate that Simpson Strong-Tie Company Strong-Wall® High Strength Wood Shearwall Panels (WSWHs) , described in ICC-ES evaluation report ESR-2652, and together noted as Strong-Wall Panels, have also been evaluated for compliance with the codes noted below as adopted by the Los Angeles Department of Building and Safety (LADBS).

Applicable code editions:

- 2020 *City of Los Angeles Building Code* (LABC)
- 2020 *City of Los Angeles Residential Code* (LARC)

2.0 CONCLUSIONS

The Simpson Strong-Tie Company Strong-Wall® High Strength Wood Shearwall Panels (WSWHs), described in Sections 2.0 through 7.0 of the evaluation report ESR-2652, comply with the LABC Chapters 19 and 23, and the LARC, and are subject to the conditions of use described in this supplement.

3.0 CONDITIONS OF USE

The Simpson Strong-Tie Company Strong-Wall® High Strength Wood Shearwall Panels (WSWHs), described in this evaluation report supplement must comply with all of the following conditions:

- All applicable sections in the evaluation report ESR-2652.
- The design, installation, conditions of use and identification are in accordance with the 2018 *International Building Code®* (2018 IBC) provisions noted in the evaluation report ESR-2652.
- The design, installation and inspection are in accordance with additional requirements of LABC Chapters 16, 17, and 93, as applicable.
- Gap between the panel and the header beam/girder shall not be permitted. Lumber for the header or solid filler pieces shall have moisture content not more than 19% at the time it is fastened to the panel.
- Panels located in exterior walls shall be covered with an approved weather-resistant exterior wall envelope complying with Section 1403 of the 2020 City of Los Angeles Building Code.
- Structural Observation shall be required for the construction of all Portal Frames.
- When Strong-Wall® High Strength Wood Shearwall Panels (WSWHs) are used in line with other types of lateral-force-resisting systems, only one system type shall be considered as the lateral resistance element, except where approved by LADBS on a case-by-case basis.
- The seismic design provisions for hillside buildings referenced in LABC Section 2301.1 have not been considered and are outside of the scope of this supplement.

This supplement expires concurrently with the evaluation report, reissued April 2022 and revised May 2022.

ICC-ES Evaluation Reports are not to be construed as representing aesthetics or any other attributes not specifically addressed, nor are they to be construed as an endorsement of the subject of the report or a recommendation for its use. There is no warranty by ICC Evaluation Service, LLC, express or implied, as to any finding or other matter in this report, or as to any product covered by the report.

Copyright © 2022 ICC Evaluation Service, LLC. All rights reserved.

ICC-ES Evaluation Report

ESR-2652 FBC Supplement

Reissued April 2022
Revised May 2022
This report is subject to renewal April 2023.

www.icc-es.org | (800) 423-6587 | (562) 699-0543 *A Subsidiary of the International Code Council®*

DIVISION: 06 00 00—WOOD, PLASTICS, AND COMPOSITES
Section: 06 12 19—Shear Wall Panels

REPORT HOLDER:

SIMPSON STRONG-TIE COMPANY INC.

EVALUATION SUBJECT:

STRONG-WALL® HIGH STRENGTH WOOD SHEARWALL PANELS (WSWHs)

1.0 REPORT PURPOSE AND SCOPE

Purpose:

The purpose of this evaluation report supplement is to indicate that the Simpson Strong-Tie® Strong-Wall® High Strength Wood Shearwall Panels (WSWHs), described in ICC-ES evaluation report ESR-2652, and together noted as Strong-Wall panels, have also been evaluated for compliance with the codes noted below.

Applicable code editions:

- 2020 *Florida Building Code—Building*
- 2020 *Florida Building Code—Residential*

2.0 CONCLUSIONS

The Simpson Strong-Tie® Strong-Wall® High Strength Wood Shearwall Panels (WSWHs), described in Sections 2.0 through 7.0 of ICC-ES evaluation report ESR-2652, comply with the *Florida Building Code—Building*, and the *Florida Building Code—Residential*. The design requirements must be determined in accordance with the *Florida Building Code—Building* or the *Florida Building Code—Residential*, as applicable. The installation requirements noted in ICC-ES evaluation report ESR-2652 for the 2018 *International Building Code®* meet the requirements of the *Florida Building Code—Building* or the *Florida Building Code—Residential,* as applicable.

Use of the Simpson Strong-Tie® Strong-Wall® Wood High Strength Shearwall Panels (WSWHs) have also been found to be in compliance with the High-Velocity Hurricane Zone provisions of the *Florida Building Code—Building*, and the *Florida Building Code—Residential*.

For products falling under Florida Rule 61G20-3, verification that the report holder's quality assurance program is audited by a quality assurance entity approved by the Florida Building Commission for the type of inspections being conducted is the responsibility of an approved validation entity (or the code official, when the report holder does not possess an approval by the Commission).

This supplement expires concurrently with the evaluation report ESR-2652, reissued April 2022 and revised May 2022.

ICC-ES Evaluation Reports are not to be construed as representing aesthetics or any other attributes not specifically addressed, nor are they to be construed as an endorsement of the subject of the report or a recommendation for its use. There is no warranty by ICC Evaluation Service, LLC, express or implied, as to any finding or other matter in this report, or as to any product covered by the report.

Copyright © 2022 ICC Evaluation Service, LLC. All rights reserved.