Proposed Changes

FIRST PROPOSAL

TABLE 4.4-4

<u>The Type H Connector</u>

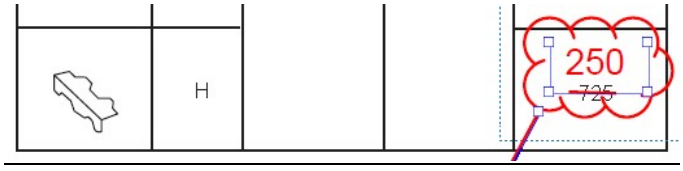

The Type H Connector is listed on page 5-16 of The Prestandard at 220#. On Sheet 3 of The Plan Set it is listed at 275#. On page 4-15 it <u>was listed</u> at 725#. This 725# value has been replaced with 250#. Obviously, it can't have 3 different values.

CONNECTORS				
	D	Wall to Upper Floor	SHEET D3	565
	E			740
	F			590
	G			445
	H			220

PAGE 5-16 IN PRESTANDARD

	TYPE H Simpson Strong-Tie KC Metals USP Structural Connectors	L30 CA30 A3	250# 275# 590#

SHEET S3 IN THE PLAN SET

	D	Floor to Cripple Wall or Floor to Foundation Sill	SHEETS D2, D3 & D3.1	565
	E			740
	F			590
	G			445
	H			725

PAGE 4-15 IN PRESTANDARD

Proposed change:
The Simpson equivalent is the L30 at 250#. Make sure the Type H Connector (L30) has the same value wherever it appears in The Standard.

Model No.	Fasteners (in.)	L (in.)	Load Direction	DF/SP Allowable Loads			
				Floor (100)	Snow (115)	Roof (125)	Wind/ Seismic (160)
GA1	(4) 0.148 x 1½	2¾	F_1, F_2	235	270	290	350
	(4) #9 x 1½" SD		F_1	340	375	375	375
	(4) #9 x 1½" SD		F_2	340	395	430	435
GA2	(6) 0.148 x 1½	3¼	F_1, F_2	355	405	435	550
	(6) #9 x 1½" SD		F_1	515	590	640	695
	(6) #9 x 1½" SD		F_2	515	590	640	820
L30	(4) 0.148 x 1½	3	F_1	245	250	250	250
			F_2	245	275	295	370
L50	(6) 0.148 x 1½	5	F_1	365	415	445	525
			F_2	365	415	445	555
L70	(8) 0.148 x 1½	7	F_1, F_2	485	550	595	740
L90	(10) 0.148 x 1½	9	F_1, F_2	610	690	740	925
LS30	(6) 0.148 x 1½	3⅜	F_1	320	320	320	320
	(6) 0.148 x 3		F_1	355	395	395	395

The L30 was s chosen because it is only 3" long such that it can fit in narrow joist cavities as well as effectively make the connection found in the details where the Type H Connector is specified such as in Detail 1, Sheet D2.

Figure 4.4-3

Detail 1, Sheet D2

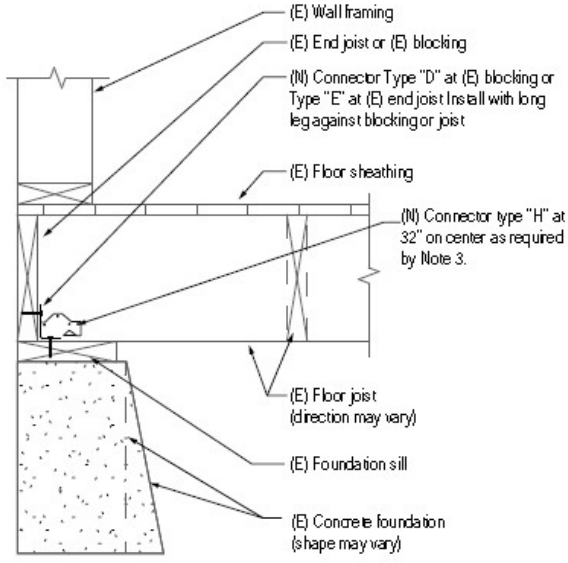

The Type D,E, and H Connectors all have the same shape and this may confuse contractors.

Proposed Change

Replace the Simpson L30 with the Simpson A23. It is shorter (2 ¾”) than the L30 and has a higher capacity of 535#. This hardware is also easier to find at builder’s supply stores. To my recollection this substitution was discussed and agreed upon at a cripple wall task group meeting.

Our line of angles provides a way to make a wide range of 90° connections.

Material: A21 and A23 — 18 ga.; all other A angles — 12 ga.

Finish: Galvanized. Some products available in stainless steel or ZMAX® coating. See Corrosion Information, pp. 12–15.

Installation:

- Use all specified fasteners; see General Notes

Codes: See p. 11 for Code Reference Key Chart

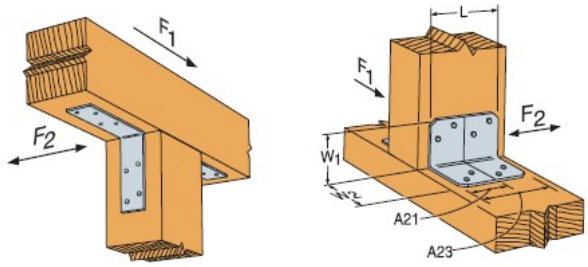

A44 Installation
(A33 similar)

A21/A23 Installation

These products are available with additional corrosion protection. For more information, see p. 14.

SD Many of these products are approved for installation with Strong-Drive® SD Connector screws. See pp. 348–352 for more information.

Model No.	Dimensions (in.)			Fasteners (in.)				Allowable Loads DF/SP (160)		Code Ref.
				Base		Post				
	W_1	W_2	L	Bolts	Nails	Bolts	Nails	F_1[3]	F_2	
A21	2	1½	1⅜	—	(2) 0.148 x 1½	—	(2) 0.148 x 1½	330	150	
A23	2	1½	2¾	—	(4) 0.148 x 1½	—	(4) 0.148 x 1½	680	535	IBC,

I still don't understand what the Type H Connector is supposed to do. It is not in any of the existing seismic retrofit guidelines such as

- **Chapter A3 of the 2019 CEBC**
- **Standard Plan A**
- **Los Angeles Plan Set 1**
- **Simpson StrongTie Plan Set**
- **City of Seattle Guidelines**
- **City of Portland Guidelines**

FEMA DR-4193-RA2 Earthquake Strengthening of Cripple Walls in Wood Frame Buildings.

FEMA P-50-1 Seismic Retrofi t Guidelines for Detached, Single-Family,Wood-Frame Dwellings

PEER Research Studies 2020/12 Quantifying the Performance of Retrofi t of Cripple Walls and Sill Anchorage in SingleFamily Wood-Frame Buildings"

FEMA P-547 Techniques For The Seismic Rehabilitation of Existing Buidlings

I do not know of any parallels in new construction or accounts of damage caused by a failure in the connection the Type H Connector is supposed to reinforce.

Proposal:

Reevaluate its purpose and if it is retained, explain its purpose somewhere in the document.

SECOND PROPOSAL

<u>The Type C Connector</u>

This is the USP SFA8,which is USPs version of the now discontinued Simpson FA8.

Unlike all the other hardware found in ICC-1300, the Type C Connector is not a Simpson or Hilti Product and for all intents and purposes is unavailable on the West Coast.

- <u>It does not have a valid ICC Report.</u> This may cause contractors and building departments to assume other untested products without ICC Reports are a legitimate option.

SFA8

MiTek USP Stock No.	Ref. No.	Steel Gauge	Fastener Schedule: Anchor Bolts Qty	Anchor Bolts Dia.	Framing: Nails[4] Qty	Nails[4] Type	Bolts[2] Qty	Bolts[2] Dia.	DF/SP Allowable Loads (Lbs.)[1]: F1 160%	Uplift 160%	Code Ref.
SFJA	FJA	12	1	5/8	--	--	2	5/8	--	1305	--
SFA8	--	12	2	1/2	7	10d x 1-1/2	--	--	875	--	

1) Allowable loads have been increased 60% for wind or seismic loads; no further increase shall be permitted.
2) All bolts shall meet or exceed the specifications of ASTM A 307.
3) Fasteners shall be installed to fully grouted and reinforced masonry units (CMU) type S or better mortar or reinforced concrete (f'c = 2,500 psi at 28 days).
4) **NAILS:** 10d x 1-1/2 nails are 0.148" diameter by 1-1/2" long.

- We used Type C Connectors 15-20 years ago because the Type A Connector was not available. The Type A Connector can be used anytime a Type C Connector is specified with added flexibility and almost twice the capacity. That is why Simpson discontinued this product many years ago. USP catalogs cannot be found in west coast builder's supply stores and are available to contractors online only and this product is special order.

- The presence of hardware that contractors never use and was discontinued years ago may cause them to become very frustrated if they look for this hardware in the Simpson Catalog or in their builder's supply. If they

remember as I do that they were discontinued years ago they will believe the entire Standard is dated and out of touch with the profession.

- The Type C Connector is used so seldom that only 32 were sold in 2019 on the entire west coast according to the manufacturer. These were sold at Lowe's hardware stores which used to carry USP hardware. This is no longer the case.

Proposal:
Remove the Type C Connector and other hardware that does not have an ICC Report from the Standard and it is a redundant hardware due to lack of demand, availability, or need. .

THIRD PROPOSAL

<u>The Type B Connector</u>

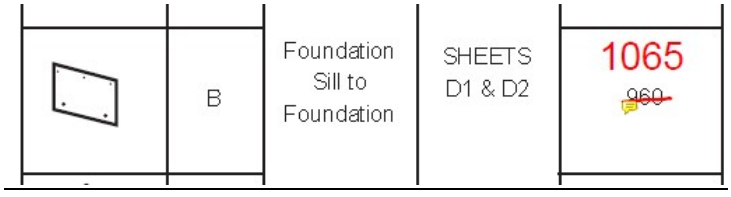

- Contractors use the Type A Connector instead of the Type B Connector because they are faster to install, cheaper, work with both 90 degree or trapezoidal foundations, and do not require that the sill and foundation be flush (which virtually never happens anyway)

While on the Standard Plan A Committee we debated if the Type B Connector (at that time it was called the FAP) should be included in the Standard. Based on our research at the time it was concluded these were not necessary because the Type A would work in all cases where a Type B Connector would work.

The chair of that committee was the San Leandro Building Official who had taught a course to homeowners for many years. The current building official Michael Jeffrey continues to teach this course and has never seen a need to promote the Type B Connector. You can call him at 510-577-3416. Email MJeffery@sanleandro.org

- Below is the sales history from Truitt and White Lumber in Berkeley, the largest builder's supply in the East Bay Area for the years 2018-2020

comparing the sales of both the Type B (SIMPSON FOUNDATION PLATE) and Type C Connectors (URFP10 FOUNDATION PLATE):

-

		2018	2019	2020	Total
Berkeley 5SFRFP	SIMPSON FOUNDATION PLATE	2	31	19	52
Berkeley 5SURFP10	SIMPSON/URFP10 FOUNDATION PLATE	348	2862	3472	6682
Total		350	2893	3491	6734

Based on these numbers if the Type B Connector were used for retrofits during 2019 and 2020, these 52 pieces would have been enough hardware to complete ~2 retrofits. (half of them were probably used as door stops)

Below is the fastener and sheathing table from Standard Plan A. Notice, the Type A Connector (UFP10) is the only sill connector besides bolts.

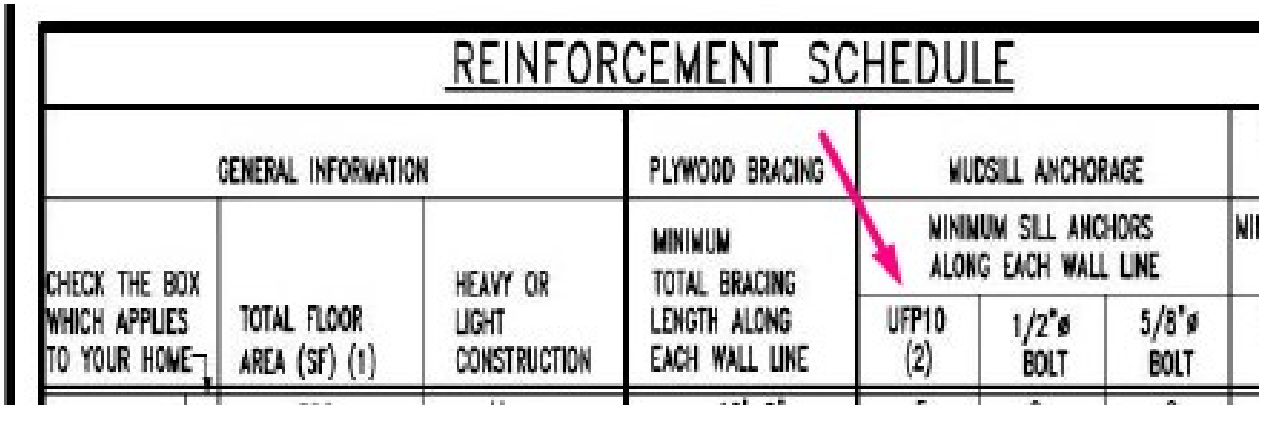

REINFORCEMENT SCHEDULE

GENERAL INFORMATION			PLYWOOD BRACING	MUDSILL ANCHORAGE		
				MINIMUM SILL ANCHORS ALONG EACH WALL LINE		
CHECK THE BOX WHICH APPLIES TO YOUR HOME	TOTAL FLOOR AREA (SF) (1)	HEAVY OR LIGHT CONSTRUCTION	MINIMUM TOTAL BRACING LENGTH ALONG EACH WALL LINE	UFP10 (2)	1/2"ø BOLT	5/8"ø BOLT

Notice how uncluttered and simple this table is to read. The entire table can be seen at the end of this report.

Proposal:
The Type B Connector only clutters the table, is never used, is a redundant piece of hardware and should be removed from The Standard.

If the Type B Connector is retained:
On trapezoidal foundations, which are very common, custom made and virtually unavailable beveled washers are required because the angles of trapezoidal foundation vary greatly from house to house. Beveled wood shims as shown in the detail are also very labor intensive to cut requiring a high degree of skill.

This is illustrated in Appendix Chapter A3 of the 2019 CEBC which contains the Type B Connector with the beveled washer and wood shim.

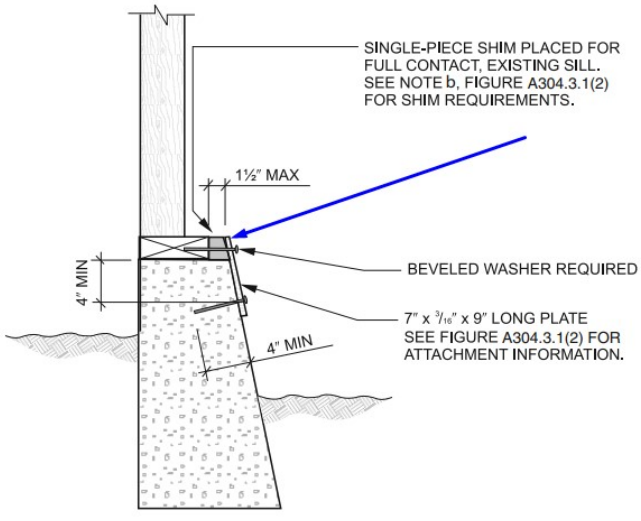

SI: 1 inch = 25.4 mm.

[BS] FIGURE A304.3.1(4)
SILL PLATE ANCHORING TO EXISTING FOUNDATION—ALTERNATIVE CONNECTION FOR BATTERED FOOTING

Proposal:

If the Type B Connector is retained include this detail from the CEBC that shows how this hardware should be installed with trapezoidal foundations to discourage misinstallations. Also, specify that the wood shim should be pressure treated.

It should be understood that contractors will ignore the 3-screw 1065# application as shown in The Standard and will instead use the 1810# value for 5 screw applications.

This increase in capacity with a very minimal increase in both labor and materials improves efficiency and reduces cost.

FRFP	2	½	(3) ¼" x 2½" SDS + shim thickness	1,065	320	IBC, FL, LA
	2	½	(5) ¼" x 2½" SDS + shim thickness	1,810	320	

I can install 18 FRFP's with 3 screws(and 36 bolts) OR I can install 10 FRFP's with 5 screws(and only 20 bolts), and achieve the same capacity.

Proposal:
If the Type B Connector is retained reduce the number of Type B Connectors in the tables to reflect the higher 1810# value for 5 screw installations. Even though contractors will already know to fill in all the holes (building inspectors call this all the time), details should reflect this.

The presence of difficult to find hardware that contractors do not use, is redundant given the much more versatile Type A Connector which is readily available, is installed in a manner that promotes inefficiency, will cause them to believe The Standard is contrary to their interests and out of touch with their profession.

FOURTH PROPOSAL

<u>The Type F Connector</u>

	F	or Floor to Foundation	SHEETS D2, D3 & D3.1	590

This appears to be the Simpson H10A. According to the current Simpson catalog it has a 565# value, not a 590# value.

SS	H8	18	(5) 0.148 x 1½	(5) 0.148 x 1½	—	780	95
	H10A Field Bent	18	(9) 0.148 x 1½	(9) 0.148 x 1½	—	855	590
	H10A	18	(9) 0.148 x 1½	(9) 0.148 x 1½	—	1,040	565
SS	H10ASS	18	(9) 0.148 x 1½	(9) 0.148 x 1½	—	970	565
	H10AR	18	(9) 0.148 x 1½	(9) 0.148 x 1½	—	1,050	490
	H10S	18	(8) 0.131 x 1½	(8) 0.131 x 1½	(8) 0.131 x 2½	910	660

Retrofit contractors almost exclusively use the H10AR because these old houses are made of full dimension lumber. The R stands for "Rough Cut". The 590# comes from the Simpson Catalog listing for field bent H10As used on roof rafters.

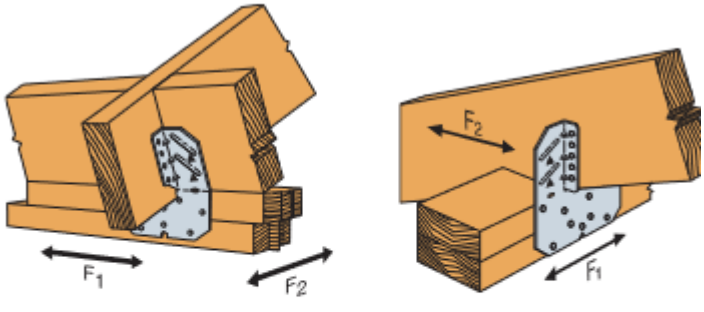

14 H10A Field-Bent Installation

15 H10A Installation

H10A optional nailing connects shear blocking to rafter. Use 0.131" x 2½" nails. Slot allows maximum field-bending up to a pitch of 6/12, use 75% of the table uplift load; bend one time only.

Proposal:

Change the value in The Standard from 590# to 490# and change the quantities in the tables as required.

FIFTH PROPOSAL

<u>The Type G Connector</u>

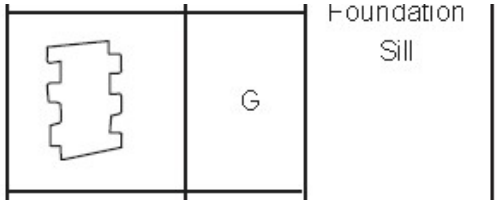

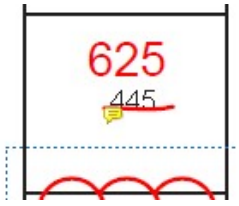

This is the Simpson LTP4 and has different values depending on the orientation and whether or not it is installed over plywood. According to the current catalog, the "G": orientation is 715#, the "H" orientation is 525#.

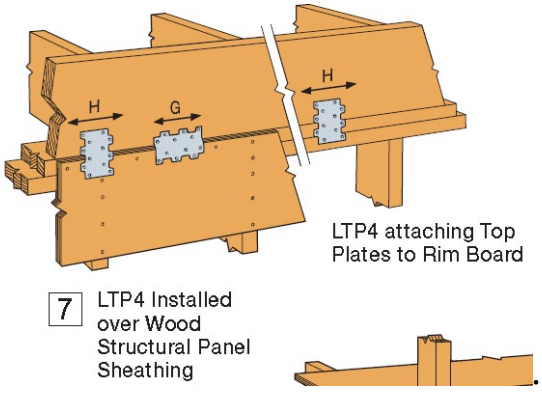

The 625# value listed in Table 4.4-4 is not in the current catalog.

Proposal:

Change the value in Table 4.4-4 to the more conservative 525# value and change the quantities in the tables as required.

LTP4	7	(12) 0.131 x 1½	G	580	715	715	500	615	615
			H	525	525	525	450	450	450
LTP5	8	(12) 0.131 x 1½	G	565	565	565	485	485	485
			H	490	490	490	420	420	420

1. Allowable loads are for one angle. When angles are installed on each side of the joist, the minimum joist thickness is 3".
2. Some illustrations show connections that could cause cross-grain tension or bending of the wood during loading if not reinforced sufficiently. In this case, mechanical reinforcement should be considered.
3. LTP4 can be installed over ⅜" wood structural panel sheathing with 0.131" x 1½" nails and achieve 0.72 of the listed load, or over ½" sheathing and achieve 0.64 of the listed load. 0.131" x 2½" nails will achieve 100% load.
4. LTP4 satisfies the IRC continuously sheathed portal frame (CS-PF) framing anchor requirements when installed over raised wood floor framing per Figure R602.10.6.4.
5. The LTP5 may be installed over wood structural panel sheathing up to ½" thick using 0.131" x 1½" nails with no reduction in load.

Propsal:
Include a footnote in the tables that requires 25% more Type G Connectors if installed over plywood.

SIXTH PROPOSAL

TABLE 4.4.3 TIE-DOWNS

TIE-DOWNS

pplemental Technical Notes, Sheet S2, Section T

TYPE	SHEET REF	CAPACITY (ASD)
Wood Stud to Foundation Tension Tie	SHEET D4	3000#

This is the Simpson HDU2 which has a hardware to wood capacity of 3050# in the Simpson Catalog. After numerous discussions with both Simpson and Hilti it was determined that the failure mode will be in the concrete and not in the wood.

In their opinion the actual value for this hardware is somewhere around ~2400#.

This is from calculations done by a senior engineer at Simpson.

11. Results

11. Interaction of Tensile and Shear Forces (Sec. D.7)?

Tension	Factored Load, N_{ua} (lb)	Design Strength, $øN_n$ (lb)	Ratio	Status
Steel	2350	9833	0.24	Pass
Concrete breakout	**2350**	**2344**	**1.00**	**Pass (Governs**
Adhesive	2350	5018	0.47	Pass

This is the from calculations done by a senior engineer at Hilti

3 Tension load

	Load N_{ua} [lb]	Capacity ϕ N_n [lb]	Utilization $\beta_N = N_{ua}/\phi$ N_n	Status
Steel Strength*	500	9,833	6	OK
Bond Strength**	500	4,623	11	OK
Sustained Tension Load Bond Strength*	N/A	N/A	N/A	N/A
Concrete Breakout Failure**	500	2,344	22	OK

* highest loaded anchor **anchor group (anchors in tension)

These calculations were done assuming 2500psi concrete. According to the 2019 CEBC existing Concrete is only 1500psi.

[BS] TABLE A1-D
STRENGTH VALUES FOR EXISTING MATERIALS

EXISTING MATERIALS OR CONFIGURATION OF MATERIALS[a]		STRENGTH VALUES x 14.594 for N/m
Horizontal diaphragms	Roofs with straight sheathing and roofing applied directly to the sheathing.	300 lbs. per ft. for seismic shear
	Roofs with diagonal sheathing and roofing applied directly to the sheathing.	750 lbs. per ft. for seismic shear
	Floors with straight tongue-and-groove sheathing.	300 lbs. per ft. for seismic shear
	Floors with straight sheathing and finished wood flooring with board edges offset or perpendicular.	1,500 lbs. per ft. for seismic shear
	Floors with diagonal sheathing and finished wood flooring.	1,800 lbs. per ft. for seismic shear
	Metal deck welded with minimal welding.[c]	1,800 lbs. per ft. for seismic shear
	Metal deck welded for seismic resistance.[d]	3,000 lbs. per ft. for seismic shear
Crosswalls[b]	Plaster on wood or metal lath.	600 lbs. per ft. for seismic shear
	Plaster on gypsum lath.	550 lbs. per ft. for seismic shear
	Gypsum wallboard, unblocked edges.	200 lbs. per ft. for seismic shear
	Gypsum wallboard, blocked edges.	400 lbs. per ft. for seismic shear
Existing footing, wood framing, structural steel, reinforcing steel	Plain concrete footings.	f'_c = 1,500 psi (10.34 MPa) unless otherwise shown by tests
	Douglas fir wood.	Same as D.F. No. 1
	Reinforcing steel.	F_y= 40,000 psi (124.1 N/mm^2) maximum

If proper end and edges distances are not met, the value of this hardware can drop significantly.

Proposal:
Determine the value of this connection in 1500psi concrete and see if the result has a substantive bearing on the tables.

Proposal:
Determine adequate end and edge distance requirements and includes these as footnotes in the tables and in the details.

SEVENTH PROPOSAL

TABLE 4.4-2 SILL ANCHOR BOLTS

SILL ANCHOR BOLTS					
IMAGE	TYPE	~~EMBEDMENT DEPTH~~ Diameter ~~1/2"ø~~	Embedment depth ~~5/8"ø~~	Sheet Ref	Shear Capacity (ASD)
	Screw-Type Anchor	1/2" ~~4-1/2"~~ 5/8"	4 1/2" ~~4-1/2"~~ 4 1/2"	Sheet D1, D2, D4, D5, D7	1040 IMAG 1488
	Adhesive-Type Anchor	1/2" ~~4-1/4"~~ 5/8"	4 1/4" ~~5"~~ 5"		1040 1488

~~Figure 4.4-3~~ Foundation sill anchors. Sheet S3. ~~Figure 4~~

As far as I can tell in Hilti's ICC Report the required embedment is less than the 4 ½" listed in the table below.

Bolts are listed at 1040# per TABLE 4.4-2 in the Standard. This is the strength of the bolt to wood connection.

The 1575# bolt to <u>concrete</u> value at just 2 ¼" embedment. The greatly exceeds the 1040# wood-to-bolt value found in TABLE 4.4-2. In other words, more than 2 ¼" is redundant and adds to cost unnecessarily.

4 ½" penetration provies a 9,705# bolt to concrete value which is waaaaay more than 1040# wood-to-bolt capacity needed.

1/2	2-1/4 (57)	1,460 (6.5)	1,600 (7.1)	1,850 (8.2)	2,265 (10.1)	1,575 (7.0)
	3 (76)	2,475 (11.0)	2,710 (12.1)	3,130 (13.9)	3,835 (17.1)	2,665 (11.9)
	4-1/4 (108)	4,505 (20.0)	4,935 (22.0)	5,700 (25.4)	6,980 (31.0)	9,705 (43.2)

This requirement increases cost unnecessarily in terms of both labor and material for the following reason.

If the minimum embedment is set at 2 ¼" contractors will be able to use 6" screw anchors. These are much cheaper and save tremendously on labor.

In order to gain 4 ½” embedment a screw anchor must be 8 inches long. It must go through a 1 ½” block, and a 2” sill for 4 ½” into the concrete.

If this is the case, contractors will be forced to use 12” long SDS Plus masonry bits. This 12” added to the 16” length of the shortest rotary hammer equals ~ 27” On the other hand, 6 or 7” screw anchors require an 8” SDS Plus masonry .

In tight crawl spaces 4” of extra vertical clearance can make a big difference.

Proposal:
Change the minimum embedment from 4 ½” to 2 ¼”

EIGHTH PROPOSAL

TABLE 4.4-2 Adhesive-Type Anchors.

I think we are asking contractors to poison themselves and their clients by allowing adhesive anchors because both Hilti and Simpson require dust in the holes be blown out with 80psi compressed air. This creates dangerous silica dust.

If our clients insist on adhesive anchors they must sign a waiver stating they are aware fine carcinogenic dust will be dispersed over their first floor living area when the work is done.

OSHA® FactSheet

CONTROL SILICA DUST
Breathe Easier

OSHA’s Respirable Crystalline Silica Standard for Construction

Workers who are exposed to respirable crystalline silica dust are at increased risk of developing serious silica-related diseases. OSHA’s standard requires employers to take steps to protect workers from exposure to respirable crystalline silica.

Proposal:
Remove adhesive anchors from the table. For tie-downs where adhesive anchors are unavoidable mention OSHA safety requirements.

NINTH PROPOSAL

Figure 4.4-2 Detail 3

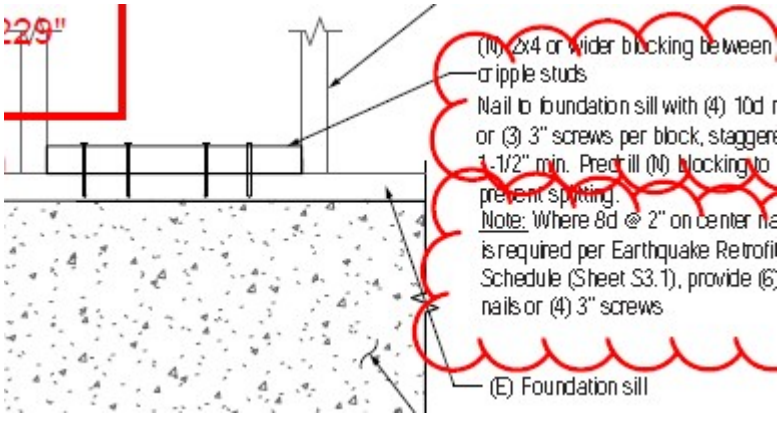

This block is required to provide a nailing surface for the plywood.

This is the problem these blocks address.

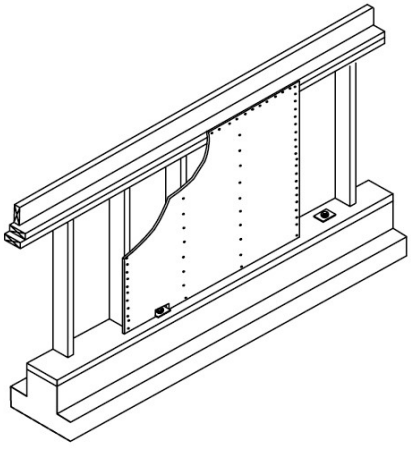

Construction problem

Plywood can be nailed to studs and topplate but cannot be nailed or stapled to mudsill.

One solution is to nail blocks between the studs as is illustrated in Figure 4.4-2 Detail 3. This is called the Nailed Blocking Method.

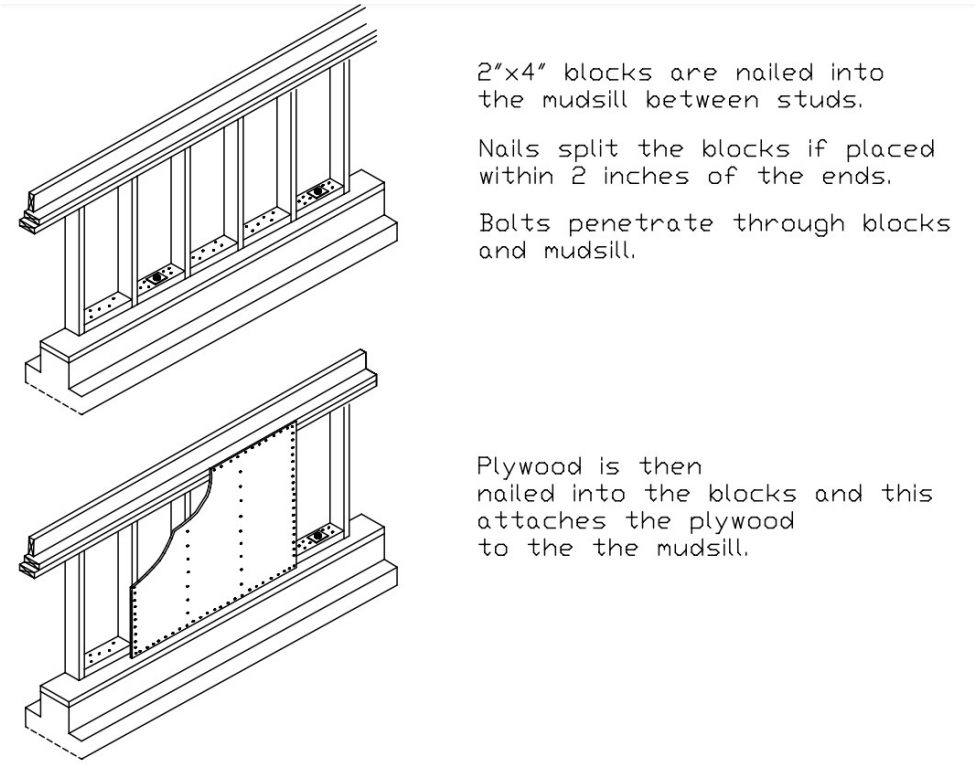

Another solution is to staple the blocks. This is called the Stapled Blocking Method.

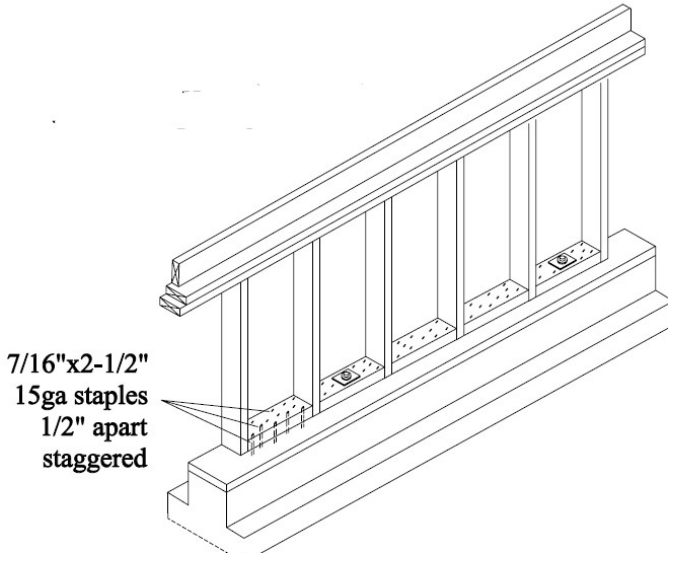

Another solution is called the reverse block method.

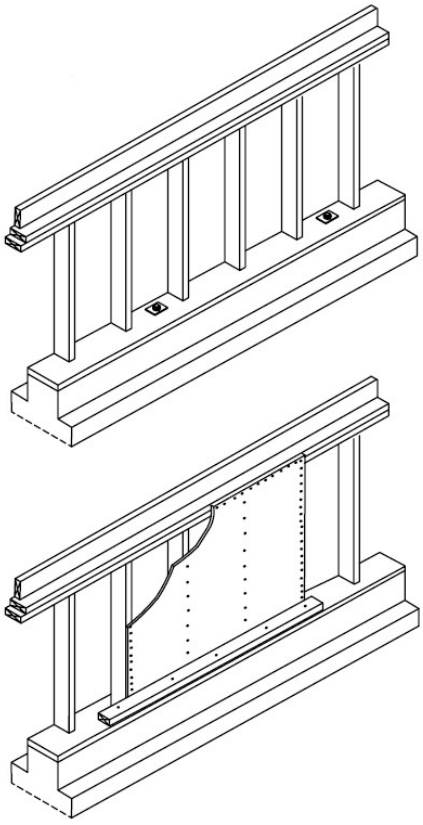

Reverse-block solution

Plywood is edge nailed to a new 2 x 4 block with 8d commons 3″ o.c staggered.

Block is then face nailed into mudsill with 12d commons 3″ o.c. staggered.

Plywood is edge nailed 3″ o.c. and field-nailed 12″ o.c. with 8d commons

Another solution is the flush cut mudsill method.

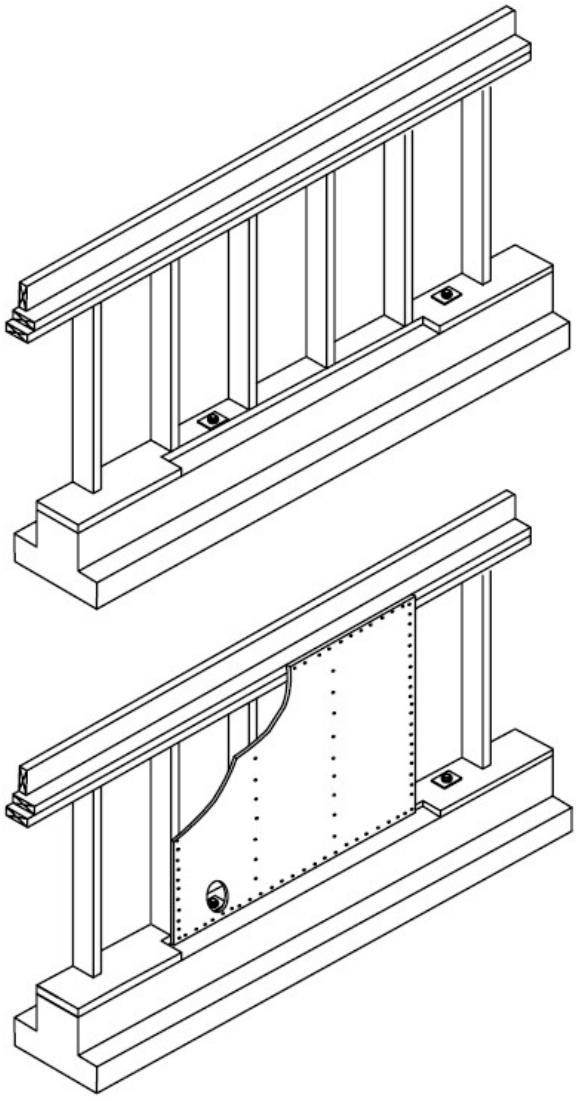

Flush Cut solution

At shear wall locations, mudsill is cut flush with the studs.

Plywood is then nailed or stapled into studs and flush cut mudsill.

When I was on the Standard Plan A committee we asked Dr. Thomas Skaggs at the APA was asked to evaluate these methods. This is what he had to say.

A P A

The Engineered Wood Association

January 13, 2003

Bay Area Retrofit
Attn: Howard Cook
154 Collins Street
Richmond, CA 94801

Dear Mr. Cook:

First, I would like to thank you for allowing me to provide comments on the various different retrofit strategies you and your committee have forwarded to our office. Perhaps your committee will find our opinions helpful in making the final retrofit strategy recommendations.

Based on my professional opinion, I would judge the retrofit strategies in the following order, from most preferred to least preferred.

1.) Flush-cut mudsill method
2.) Reverse block method
3.) Stapled blocking method
4.) Nailed blocking method

I have chosen to order the retrofit strategies based on several reasons. First, the flush-cut mudsill and the reverse block method are the closest retrofit strategies to a conventionally built shear wall. Hence I have a great deal of confidence in either of these methods. I believe the flush cut method would be more practical for most retrofits, but the reverse block method would be an acceptable alternative.

Multiple nails through the face of the small blocks greatly increase the splitting potential of the small wood blocks. Nails tend to split wood worse than staples. I believe the stapled block method is preferred over the nailed blocking method. An alternative methods might be 1/4" self drilling/self tapping lag screws.

In summary, on paper, all of the retrofit strategies are acceptable. I am of the opinion that my itemized list above is a reasonable ranking of the four methods.

I hope you find this information useful.

Sincerely,

Thomas D. Skaggs

THOMAS D. SKAGGS, Ph.D., P.E.
Senior Engineer
Technical Services Division

7011 South 19th Street • P.O. Box 11700 • Tacoma, WA 98411-0700
Telephone: (253) 565-6600 • Fax Number: (253) 565-7265

Proposal:
Add details for the Flush-cut Mudsill, Reverse block method, and the Stapled blocking methods.

EIGHTH PROPOSAL

Detail XX.

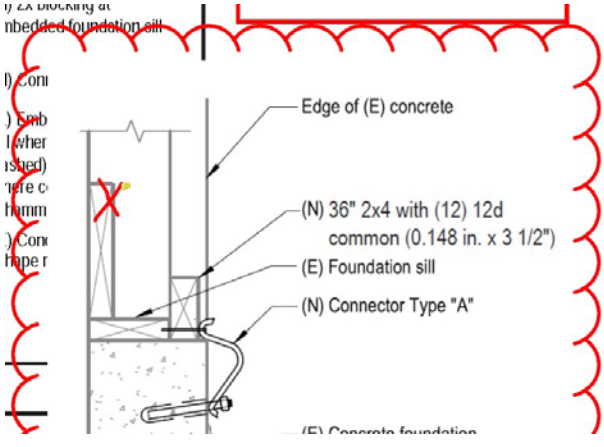

The block is touching concrete. To maintain consistency with the other details it might be a good idea to label this as pressure treated.

It may be better to connect the block to the sill with (5) 4 1/2”x ¼” self tapping lag screws for a value of 2,000#. The specified screws are 3” long.

This was recommended to me by a senior engineer at Simpson StrongTie and has the added benefit of maintaining consistent fastener ductility in all the fasteners because it does not mix nails and screws.

The cheapest alternative would be to have Simpson test this hardware without securing the block to the sill shear. This is how they tested the Type B Connector. In this case the only thing that would be required is a block and (5) longer 4 1/2” self tapping screws. T

Proposal:
Ask Simpson to test this hardware with an unsecured shear plane between the block and the sill as they did with the Type B Connector. Specify a pressure treated block. Secure all shear planes with the same fastener types i.e. ¼” self tapping screws.

NINTH PROPOSAL

Detail 2, Sheet D2

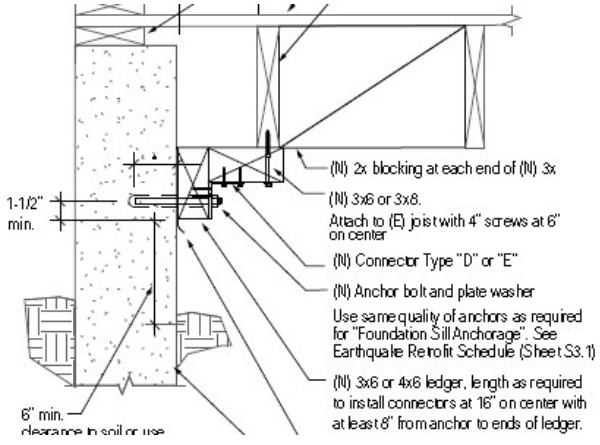

Why is 3x being specified here and in Detail 5 Sheet D2 and NOT in Detail 3-Sheet D2, Detail 4 Sheet D2, Detail 6 Sheet D2, Detail 3 Sheet D3, Detail 4 Sheet D3, Detail 5 Sheet D3, and Detail 6 Sheet D3?

Proposal:
Change the 3x lumber to 2x lumber in all the details.

This detail does the same thing and is used by many contractors. It is cheaper to install and just as effective.

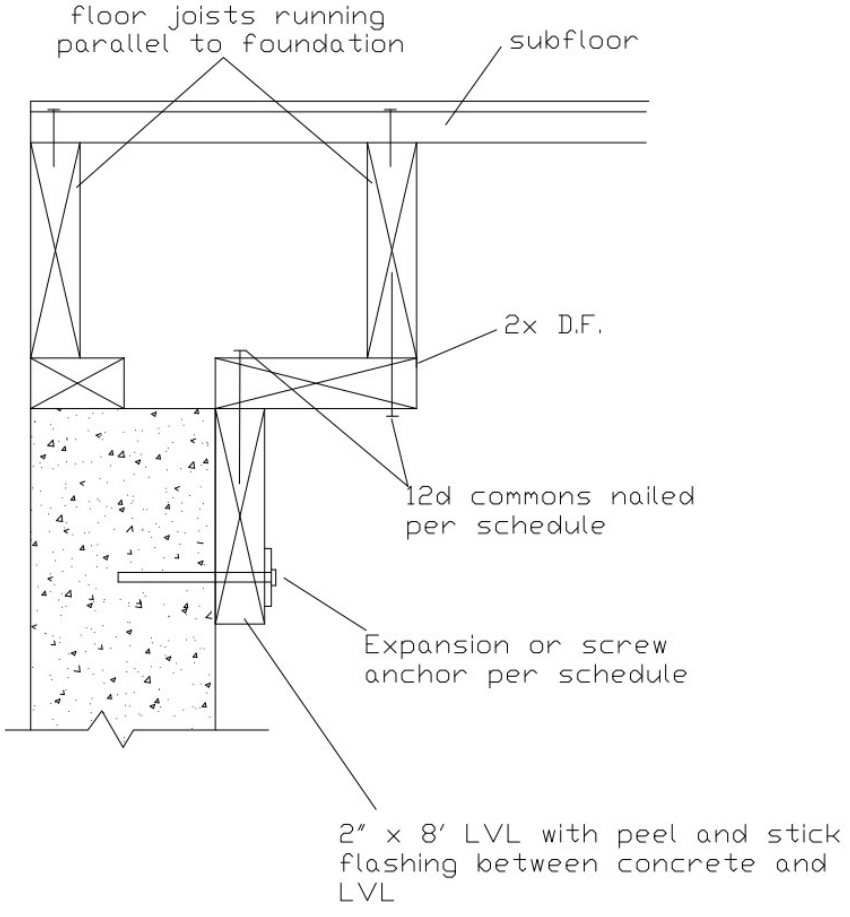

If contractors see details that are less cost-effective than what they already build they will question the cost-effectiveness of the other details.

Proposal

Replace Detail 2, Sheet D2 with this one.

Proposal

None of the details make a distinction between nominal and rough sawn lumber. These old houses are almost exclusively made of rough sawn lumber and this should be reflected in the details.

This detail for balloon framing is a case in point where nominal and rough saw lumber are combined.

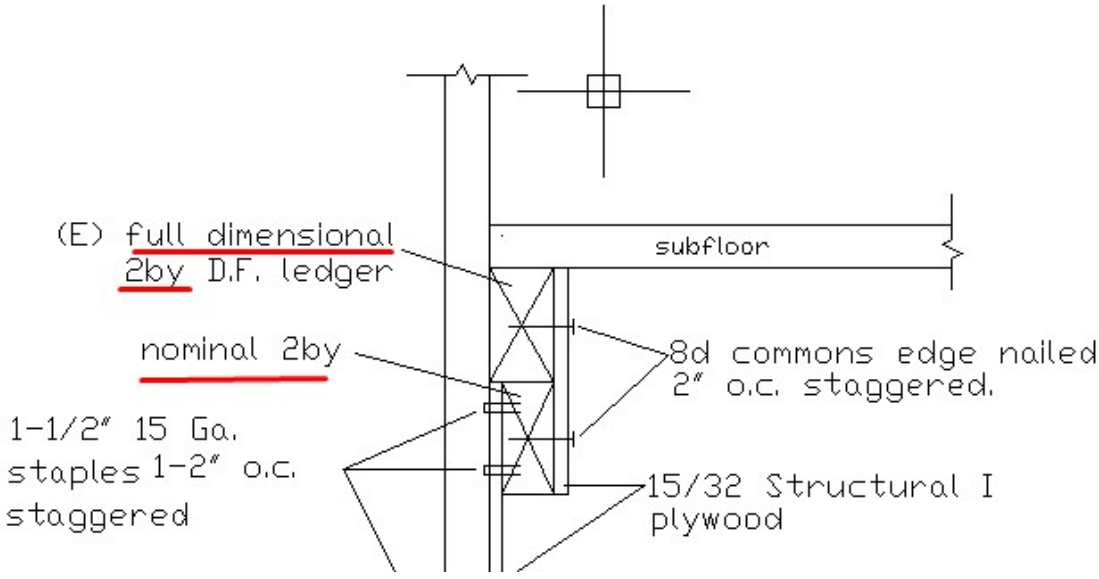

Detail 3, Sheet D2

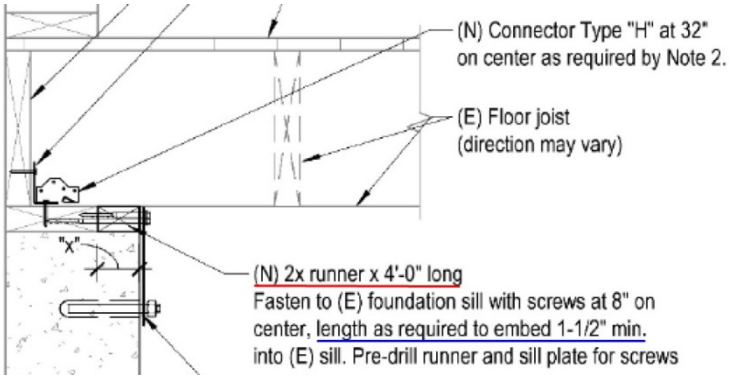

The shim is touching concrete. In order to make it consistent with the rest of The Standard it should probably be pressure treated.

The requirement that the screws be embedded into the sill 1 ½” is not an approved embedment according to Simpson StrongTie who referred me to the table on the next page. The minimum penetration is 2”.

Strong-Drive®
SDS HEAVY-DUTY CONNECTOR Screw

For more information, see p. 60, C-F-2019 Fastening Systems Catalog

SDS — Allowable Shear Values for Sole-to-Rim Connections

Size (in.)	Model No.	Sole Plate Nominal Thickness (in.)	Minimum Penetration into Rim Board (in.)	Reference Allowable Loads (lb.)							
				2x DFL/SP Rim Board		2x SPF/HF Rim Board		1¾" Min. LVL Rim Board		1¾" Min. LSL Rim Board	
				DFL/SP Sole Plate	SPF/HF Sole Plate	DFL/SP Sole Plate	SPF/HF Sole Plate	DFL/SP Sole Plate	SPF/HF Sole Plate	DFL/SP Sole Plate	SPF/HF Sole Plate
¼ x 4.5	SDS25412	2x	2	250	190	190	190	190	190	220	190
¼ x 5	SDS25500	2x	2	250	190	190	190	190	190	220	190
¼ x 6	SDS25600	2x, 3x, (2)-2x	2	250	190	190	190	190	190	220	190

1. Allowable loads are based on testing per ICC-ES AC233 and are limited to parallel-to-grain loading.
2. Allowable loads are shown at the wood load duration factor of C_D = 1.00. Loads may be increased for load duration by the building code up to a C_D = 1.60.
3. Minimum spacing of the SDS for sawn lumber applications is 3" o.c., minimum end distance is 3", and minimum edge distance is ⅜".
4. Minimum spacing of the SDS for LVL and LSL applications is 6" o.c., minimum end distance is 6", and minimum edge distance is ⅜".
5. Wood structural panel up to 1⅛" thick is permitted between the sole plate and rim board provided it is fastened to the rim board per code and the minimum penetration of the screw into the rim board is met.
6. A double 2x sole/top plate is permitted provided it is independently fastened per the code and the minimum screw penetration per the table is met.
7. Minimum rim board height shall be 9¼" when using SDS screws for sole and top plate fastening.
8. Sole-to-rim loads can be achieved without a wall below.

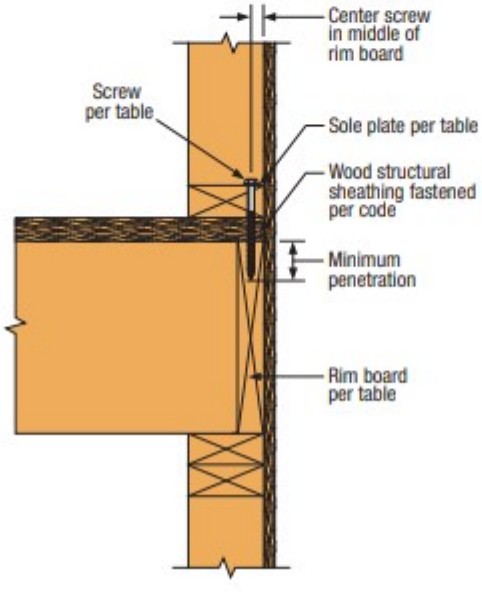

Sole-to-Rim Board Assembly
(Other fasteners not shown for clarity)

When this detail is applied to a typical 27’ by 50’ single story house, the runners extend beyond the foundation.

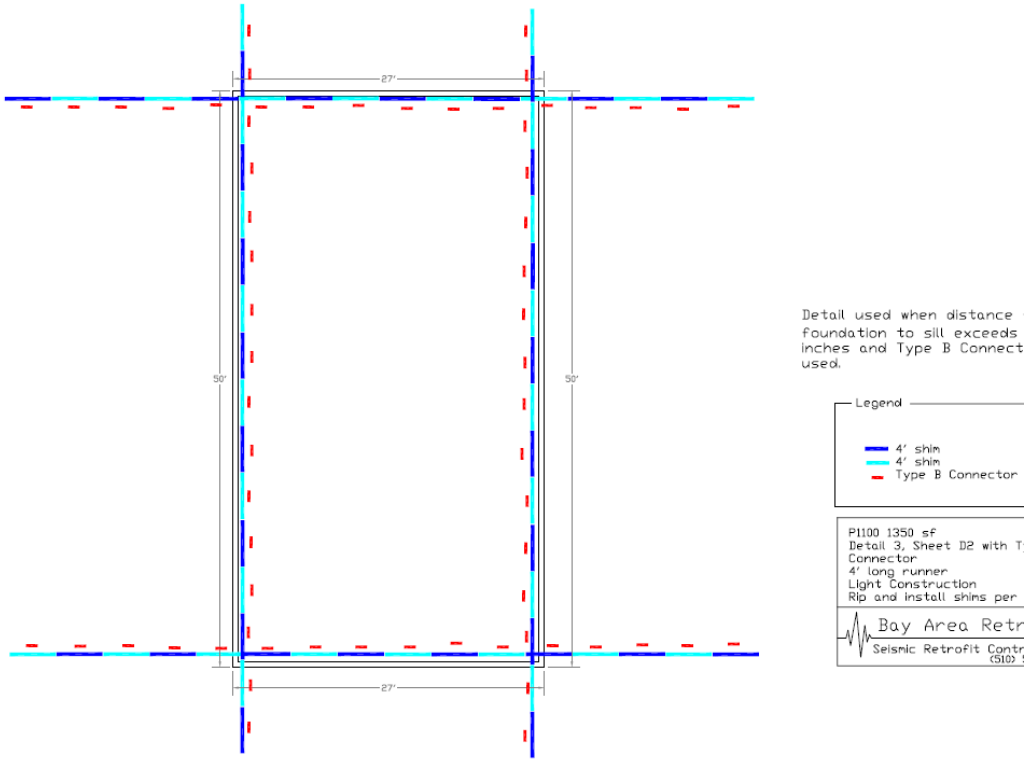

When contractors see how impractical Detail 3, Sheet D2 is, they will tend to discount the entire Standard.

Proposal:
Remove this detail. If it is kept change it to reflect the correct penetration and specify a pressure treated lumber runner.

Affordability

Below is a comparison between identical retrofits using P-1100 (ICC-1300) and Standard Plan A, applying each standard and identical house. The difference in the amount of materials, and by extension labor, to complete a P-1100 retrofit is double or more than a Standard Planset A retrofit. This table applies to Seismic Design Category E. I used my typical costs for bolts, plywood, framing anchors, etc.

	P-1100	Standard Plan A
1350 sf single story with 2-foot cripple walls		
Light Construction	$16,080	$5,622

Medium Construction	$17,784	$6,644
Heavy Construction	$19,592	$7,430
3150 sf two story with 5-foot cripple walls	P-1100	Standard Plan A
Light Construction	$49,384	$15,688
Medium Construction	$47,284	$22,530
Heavy Construction	$55,276	$24,392
$1,350 single story no cripple walls		
Light Construction with Type A Connector		$3,252
Light Construction with Type B Connector	$15,740	
$1,350 single story no cripple walls		
Light Construction with Detail 3, Sheet D2	$28,264	
Light Construction with Type A Connector		$4,692
3150 sf two story with no cripple walls		
Medium Construction Type A Connector	$19,764	$6,348
Medium Construction with Type B Connector	$33,584	

P-1100 retrofits cost more than double those following other widely accepted standards. If contractors must charge this much, neither they nor their clients will ever want to use it.

.Perhaps the chief complaint I hear from homeowners about engineers is that they will pay an engineer to create a simple design and instead get an engineering marvel which they later come to learn is something they cannot afford. After paying thousands to an engineer they cannot afford, they often end up doing nothing at all. Cost is the greatest disincentive for this work.

Installing the quantities in the table are not only costly, but can have seemingly absurd consequences where the retrofit runs out of foundation such as with this 2-story heavy construction house with cripple walls over 4’.

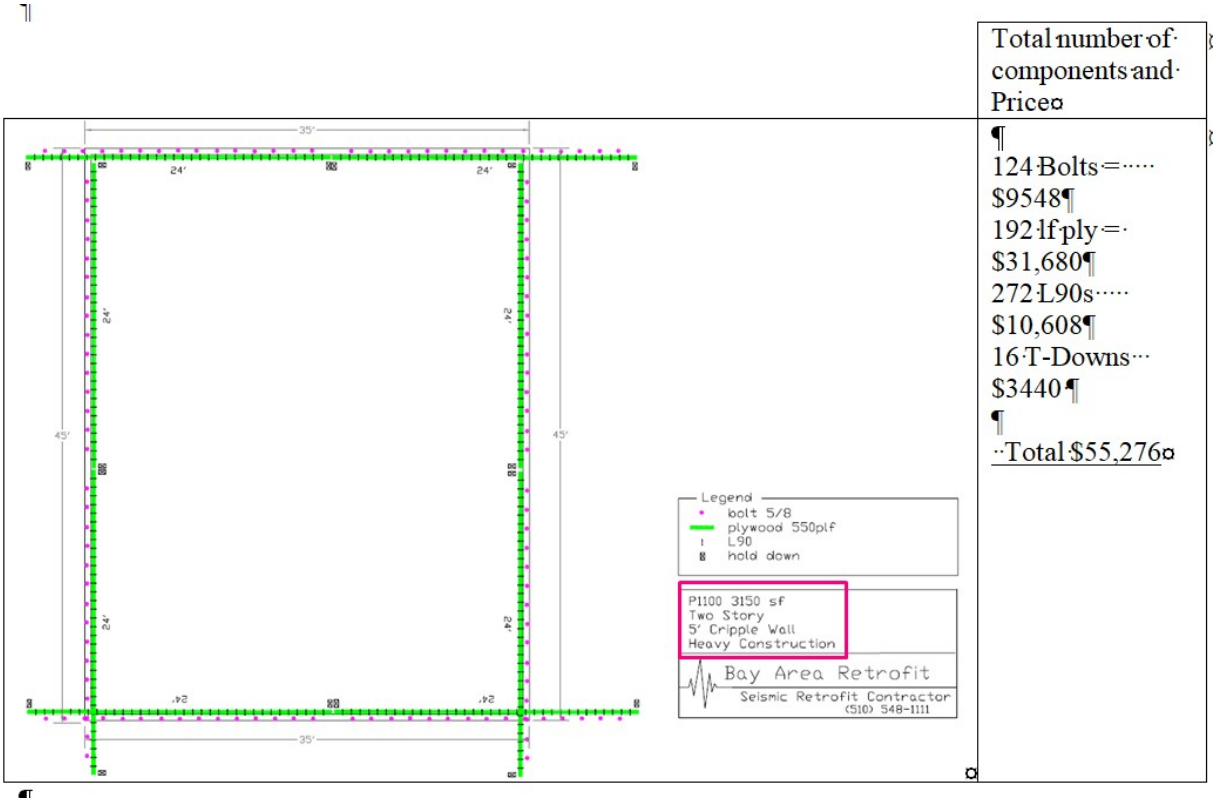

When contractors see that this kind of thing can happen when The Standard is applied they will discount the entire standard.

The force levels that appear to be the basis of P-1100 do not appear to coincide with force levels determined by the analysis of empirical data provided by the Loma Prieta and Northridge Earthquakes. Please see pages 5 and 6 in ABAG (Associatio n of Bay Area Governments) publication P96002EQK. Nor do they appear to be consistent with the V=0.146 found in the L.A. code and the V=0.186W found in Standard Plan A.

The ABAG publication can be seen on the next few pages.

If you would like to see the entire report I can send it upon request.

SHAKEN AWAKE!

Estimates of Uninhabitable Dwelling Units and Peak Shelter Populations in Future Earthquakes Affecting the San Francisco Bay Region

APRIL 1996

ASSOCIATION OF BAY AREA GOVERNMENTS

CREDITS ...

Report Authors: 1996=

Jeanne B. Perkins -- Earthquake Program Manager, Association of Bay Area Governments Ben Chuaqui -- Regional Planner, Association of Bay Area Governments

John Harrald -- Director & Professor, Institute. for Disaster and Crisis Management., George Washington University

Dukhoon Jeong -- Research Assistant, George Washington University

Support:

Dan Friess -- Research Assistant, Association of Bay Area Governments -- building data Fred Parkinson -- Systems Programmer, ABAG -- Loss model database programming Hermann Schywn -- Research Assistant, George Washington University -- shelter data Paul Wilson -- President, MapFrame Corp. -- GIS software and support

Edward Wyatt -- Environmental Engineer, Assoc. of Bay Area Governments -- building data

ABAG Management:

Eugene Y. Leong -- Executive Director

Gary Binger -- Deputy Executive Director/Planning Director

Acknowledgments:

ABAG would like to acknowledge the efforts of the following members of the Review Committee in reviewing the material which forms a basis for this document.

Earthquakes and Housing Losses Review Committee:

Thelma Rubin -- Committee Chair -- Councilmember, City of AlbanyChris Arnold -- Building Systems Development (BSD), Inc.

Roger Borcherdt -- Geophysicist, U.S. Geological Survey

Laurence Kornfield -- Chief Building Inspector, City and County of San Francisco Frank McClure -- Consulting Structural Engineer

Patrick McClellan -- former Earthquake Preparedness Coor., City of San Leandro Fire Dept. Gregg O'Ryon -- Director, Disaster Services, American Red Cross - Bay Area

Paula Schulz -- State Hazard Mitigation Officer, California Office of Emergency Services Roy Schweyer -- Mgr., Housing & Neigh. Preservation, Off of Comm. Dev., Oakland Martha Blair Tyler -- Spangle Associates, Urban Planning and Research

Frannie Winslow -- Director, Office of Emergency Services, City of San Jose

In addition, project staff wish to thank John Boatwright (USGS, Menlo Park) for his assistance in analysis of the Northridge housing data.

The writing and production of this report was financed in large part by National Science Foundation (NSF) Grants No. BCS-9302612 and CMS-9416181. Any opinions, findings, conclusions or recommendations expressed in this material are those of the authors and do not necessarily reflect the views of the National Science Foundation.

BACKGROUND ...

In 1992, ABAG estimated uninhabitable dwellings for future earthquakes affecting the San Francisco Bay Area with funding from the American Red Cross, the California Office of Emergency Services and ABAG itself George Washington University (GWU) used these estimates in developing projections of shelter populations in future earthquakes in the San Francisco Bay Area.

The research which forms the basis for this document represents a significant refinement and expansion of previous efforts by ABAG and GWU. It incorporates more sophisticated ground shaking intensity models. In fact, those models were tested and refined using the loss estimation models developed for this project. It incorporates better data on the residential housing stock, including where it is located.

The Loma Prieta earthquake provided us with extremely valuable information. The residential structures tagged by local government building officials as unsafe (red) or limited access (yellow) following that earthquake have been carefully examined and analyzed. The data on daily occupancy load of Red Cross shelters were also examined.

Finally, we have been able to incorporate significant information from the Northridge earthquake in the Los Angeles area. GWU visited the Northridge area in early February 1994 to interview over 200 people in shelters or in line seeking other forms of housing assistance. GWU gathered valuable first-hand information on the demographic characteristics of those victims, as well as on the tagging of the housing which the victims had left, that is being incorporated into the Bay Area shelter model. ABAG project staff visited that area as well, traveling with a building inspector and on their own around the affected area to see first hand the damaged housing and the residential tagging process. ABAG also collected information on residential tagging from the local governments impacted in Northridge and spent days checking and refining the data provided. The ratios between green-, yellow-, and red-tagged housing units for different types of housing construction obtained from that southern California data were incorporated into the Bay Area model.

The research that formed a basis for this report had

five principal objectives:

1) develop models of housing habitability based on intensity, distance from fault source, and underlying geologic materials for the San Francisco Bay Area;
2) model how shelter populations are related to structural damage, including data on buildings that are red-tagged as uninhabitable, as well as yellow-tagged as damaged based on actual Loma Prieta data;
3) assess the demographic characteristics of the shelter population versus the overall impacted population through use of the 1990 Census (conducted only five months after the earthquake) and Red Cross data from the Loma Prieta event;
4) relate the recovery time of the impacted housing stock to the structural type of those buildings for Loma Prieta; and
5) apply these lessons to future Bay Area earthquakes.

The *goal of theproject* is to improve mitigation, disaster response and residential rebuilding efforts in future earthquakes. *Theproject should helppeople plan for and rebuildfaster after earthquakes.*

The users of this information are varied.

1) relief agencies, such as the American Red Cross, for use intheir shelter planning efforts;
2) local governments for (a) conducting vulnerability analyses (which, in turn, can be used for mitigation and emergency response planning); (b) pre-planning for quicker recovery of low-income housing stock; and (c) designing more effective programs to encourage owners to retrofit housing stock.

We firmly believe that modeling expected uninhabitable dwelling units and shelter needs using limited data is far superior to having potential users estimate these numbers themselves.

Given that the probability of a second major or catastrophic earthquake in the San Francisco Bay Area in the next *ten* years is one in three, the rapid dissemination of existing data and research is essential. *Let's make sure that we aren't surprised by the next earthquake disaster.*

Therelationships among habitability, construction type and intensity are basedon datafrompast earthquakes.

The approach used in developing these estimates of uninhabitable dwelling units uses a five-step process:

1) estimating intensity for each of eleven future earthquakes;
2) developing an invent01y of dwelling units by construction type (based on construction material, age, number of stories, and single vs. multi-family);
3) estimating dwellings in each intensity category by assigning the residential units to residential land in each intensity category;
4) relating intensity directly to habitability using a matrix for red and yellow tagging percentages for each combination of intensity and construction type; and
5) aggregating estimates of uninhabitable dwellings to obtain census tract, city (or community), county and regional totals.

The intensity maps are based on the most recent version of ABAG's ground shaking models, described in *On Shaky Ground* (Perkins and Boatwright, 1995). The scenarios examined include:

- entire Hayward fault (both northern and southern segments);
- southern segment of the Hayward fault;
- northern segment of the Hayward fault;
- Healdsburg-Rodgers Creek fault;
- Maacama fault;
- peninsula segment of the San Andreas fault;
- San Gregorio fault;
- northern Calaveras fault;
- Concord-Green Valley fault;
- Greenville fault; and
- West Napa fault.

The estimate of the percentage of each combination of intensity and construction type that is expected to be uninhabitable is based on actual statistics on residential damage in the Loma Prieta and Northridge earthquakes collected by ABAG, as well as additional data from prior earthquakes from earlier researchers (Dunne and Sonnenfeld, 1991).

MATRICES FOR PREDICTING

PERCENT OF UNITS MADE UNINHABITABLE

The final matrices used in this project for relating intensity and building construction to percent of dwelling units made uninhabitable are shown in the tables below, the first for red-tagged units and the second for yellow-tagged multi-family units. Prior to ABAG's work on housing

TABLE: PERCENT OF DWELLING UNITS RED TAGGED

TYPE	INTENSITY					
	V	VI	VII	VIII	IX	X+
Mobile Homes	0	0	0.87	40	90	100
Unreinforced Masoruy	0	0.05	2.9	45	70	80
Non-Wood , 4-7 Stories, <1940	0	0.30	8.0	45	70	80
Non-Wood, 4-7 Stories, > 1939	0	0	0	16	54	70
Non-Wood, 7+ Stories, <1940	0	0.30	8.0	45	70	80
Non-Wood, 7+ Stories, > 1939	0	0	0	16	54	70
Wood-Frame, 4-7 Stories, <1940, Multi-Family	0	1.4	2.5	45	70	80
Wood-Frame, 4-7 Stories, > 1939, Multi-Family	0	0	0.09	10	15	25
Wood-Frame, 1-3 Stories, <1940, Multi-Family	0	0.05	0.53	11	44	64
Wood-Frame, 1-3 Stories, >1939, Multi-Family	0	0.01	0.04	6.5	15	25
Wood-Frame, 1-3 Stories, <1940, Single Family	0.01	0.04	0.12	1.8	8.4	12
Wood-Frame, 1-3 Stories, >1939, Single Family	0	0	0.02	0.18	0.69	1.8
"Other" (tents, caves, boats, etc.)	0	0	0	0	0	0

TABLE: PERCENT OF DWELLING UNITS YELLOW TAGGED (SINGLE FAMILY UNITS NOT RENDERED UNINHABITABLE)

lYPE	INTENSITY					
	V	VI	VII	VIII	IX	X+
Mobile Homes	0	0	0	0	0	0
Unreinforced Masonry	0	3.3	6.2	8.5	30	20
Non-Wood , 4-7 Stories, <1940	0.30	7.7	37	25	30	20
Non-Wood, 4-7 Stories, >1939	0	0	0	38	16	16
Non-Wood, 7+ Stories, < 1940	0.30	7.7	37	25	30	20
Non-Wood, 7+ Stories, >1939	0	0	4	38	16	16
Wood-Frame, 4-7 Stories, < 1940, Multi-Family	0	1.7	9.7	25	10	10
Wood-Frame, 4-7 Stories, > 1939, Multi-Family	0	0.05	2.6	17	25	25
Wood-Frame, 1-3 Stories, < 1940, Multi-Family	0	0.15	0.94	6.6	20	20
Wood-Frame, 1-3 Stories, > 1939, Multi-Family	0.01	0.02	0.10	12	13	22
Wood-Frame. l -3 Stories, <1940, Single Family	0	0	0	0	0	0
Wood-Frame, 1-3 Stories, >1939. Single Family	0	0	0	0	0	0
"Other" (tents, caves, boats, etc.)	0	0	0	0	0	0

Proposal:
Reduce costs by basing force levels on empirical research done by the National Science Foundation which looked at actual damage in both the Loma Prieta and Northridge Earthquakes (which hovers around a 10% red tag rate in the higher shaking zone).

DETAILs

Some of the existing details are so contrary to a contractor's common sense that the other details, along with the entire standard, will be viewed with some suspicion. One example of this can be seen in Detail 4, Sheet D2 found on the next page.

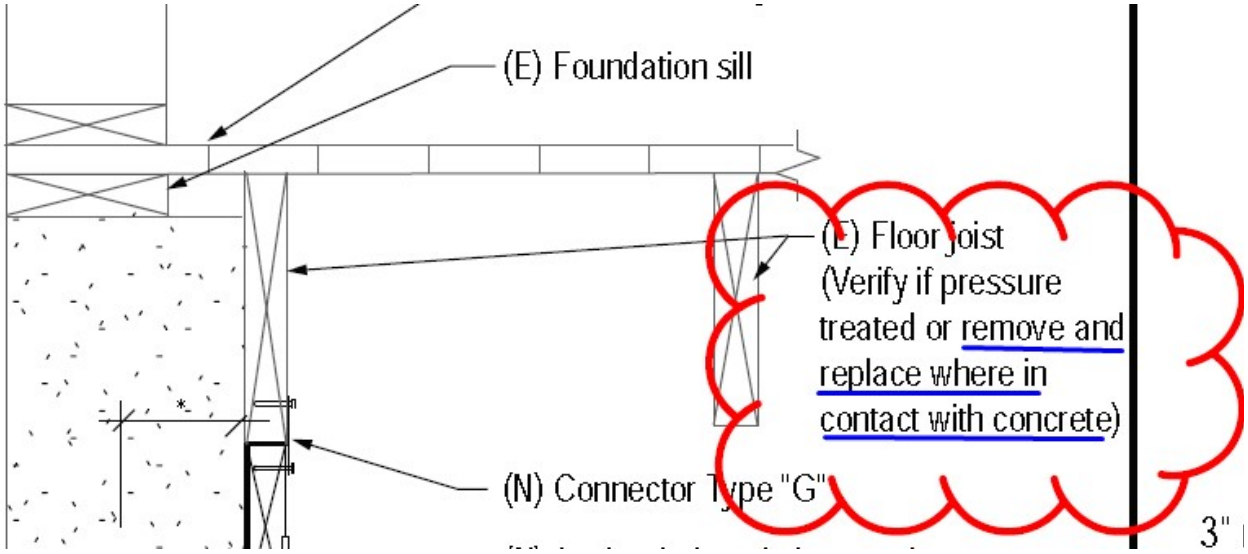

In order to remove the floor joist, the nails connecting the subfloor to the joist must be cut out. This will break the load path from the sub-floor diaphragm to the joist. Replacing it with a new pressure treated floor joist does not restore the load path.

Contractors understand the importance of not breaking load paths . When they see details like this that ignore this important concept they will tend to doubt the legitimacy of the entire standard.

For contractors, details are more important than any table. Details tell them what to do in case there is an unusual framing condition and there are LOTS of unusual framing conditions.

From my point of view as a practicing contractor who has trained many other contractors, The Standard will only be 10% as valuable as it can be if it does not include as many details as possible.

Proposal
Add a booklet of additional details.

In Conclusion

Contractors are the first point of contact for homeowners and are therefore a very important stakeholder.

If costs are double, details defy their common sense or show ignorance of the way these old houses are built, if they are frustrated looking up capacities in the Simpson Catalog because the capacities in the catalog do not match the capacities in The Standard, and if it contains few improvements over the existing canon of retrofit guidelines, they will never use it or recommend that their clients use it.

At that point the public we are trying to protect will never even hear about it, let alone use it.

I